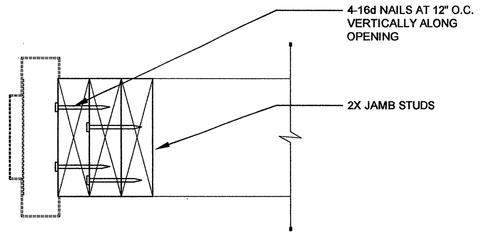

JAMB STUD NAILING | N4 | 3/4" = 1'-0"

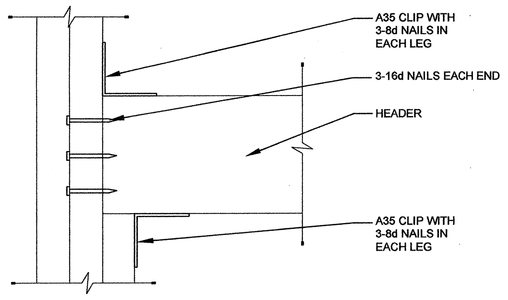

HEADER FRAMING | N7 | 3/4" = 1'-0"

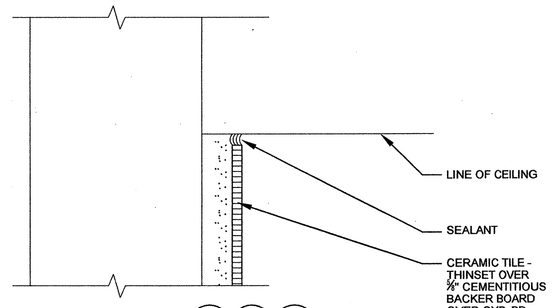

NOTES:
1. FOR TILE AT BASE SEE N4/A9.4 J14/A9.4 J14/-
2. FOR CORNER CONDITION SEE N14/-

CERAMIC TILE TO CEILING | N11 | HALF

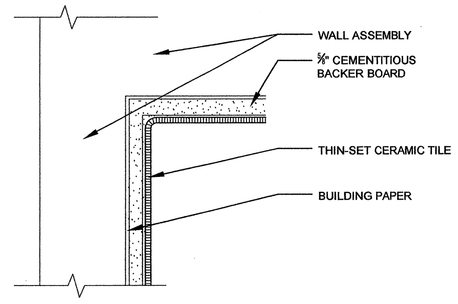

CERAMIC TILE AT CORNER | N14 | N.T.S.

NOT USED | N17 | SCALE

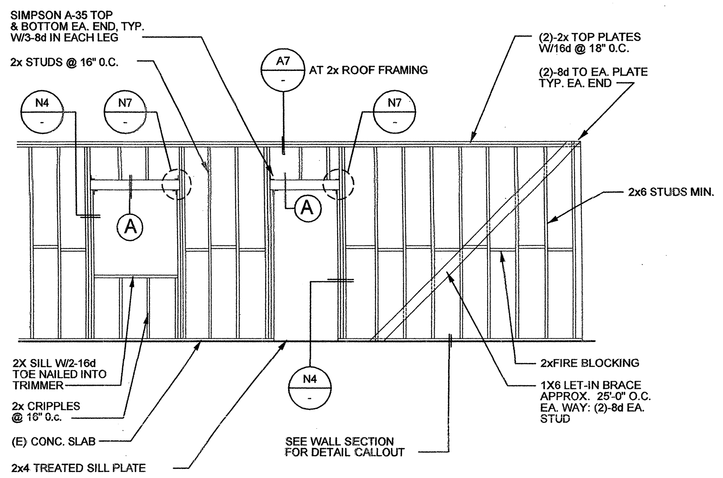

NOTES:
1. LINTEL SHALL BE GRADE MARKED DOUGLAS FIR NO. 1 OR LARCH SELECT STRUCTURAL
2. 4'-0" MIN. BETWEEN SPLICES AT TOP PLATE: (5)-16d AT EA. SPLICE

SCHEDULE (A)

OPENING WIDTH	LINTEL	KING STUD	TRIMMER
UP TO 3'-4"	4X4	(2)-2X4	(1)-2X4
3'-4" TO 4'-0"	4X4	(2)-2X4	(1)-2X4
4'-0" TO 6'-0"	4X6	(2)-2X4	(1)-2X4

NON-BEARING FULL HEIGHT WALL FRAMING | J7 | 1/4" = 1'-0"

NOT USED | J11 | SCALE

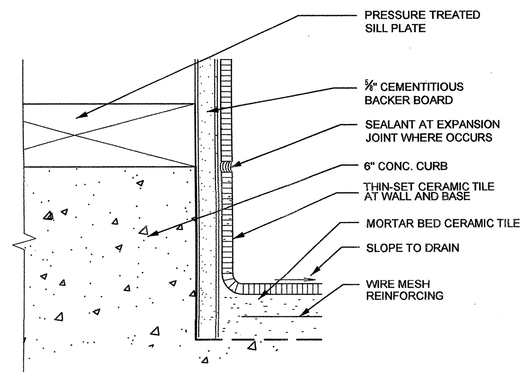

NOTE: 1. PROVIDE THIN-SET CERAMIC TILE AT SINGLE USE TOILETS WHERE NO EXISTING OR NEW FLOOR DRAIN IS SHOWN.
2. REFER TO TILE COUNCIL OF AMERICA HANDBOOK F132-93 FOR ADDITIONAL DESIGN INFORMATION. (1)

CERAMIC TILE AT WALL CURB | J14 | HALF

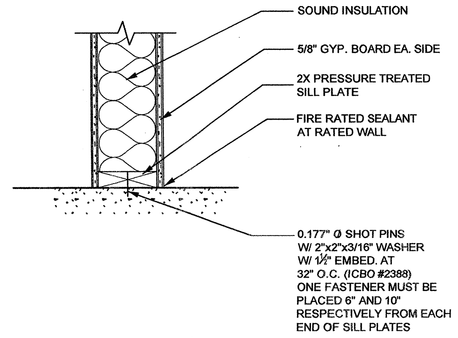

SILL OF NON-BEARING WALL | J17 | 1-1/2" = 1'-0"

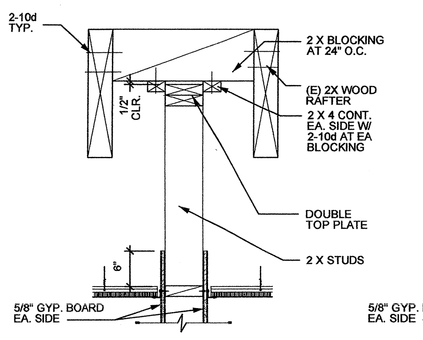

A PARALLEL

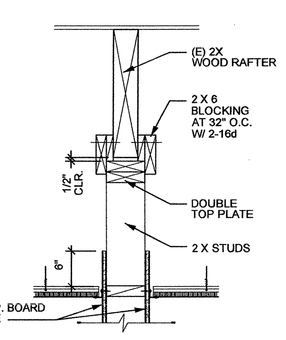

B PARALLEL

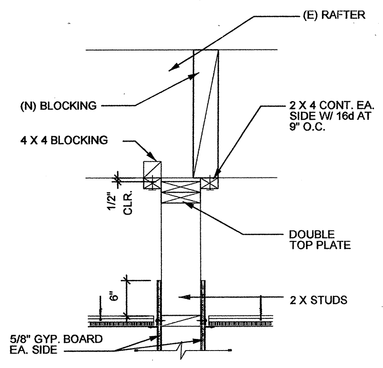

C PERPENDICULAR

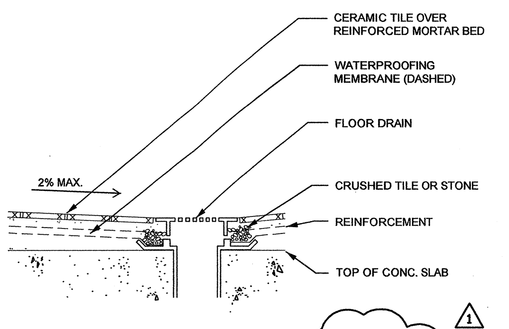

NOTE: REFER TO P2 / MP4.1G FOR ADDITIONAL INFORMATION. (1)

FLOOR DRAIN AT CERAMIC TILE FLOOR | A4 | 3" = 1'-0

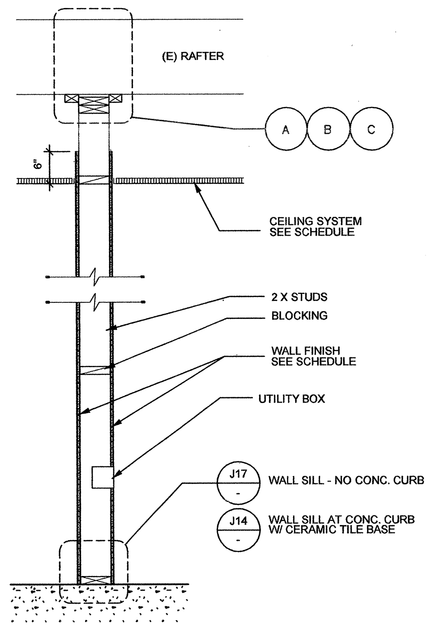

INTERIOR NON-RATED WALL | A7 | N.T.S.

NOT USED | A11 | SCALE

NOT USED | A14 | SCALE

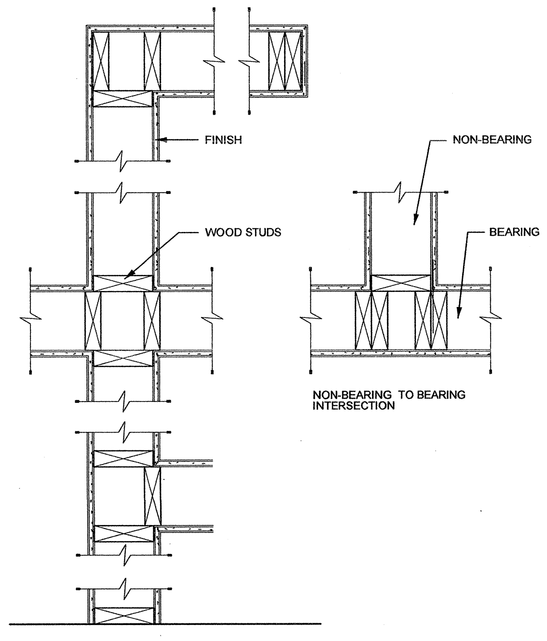

TYPICAL STUD LAYOUT | A17 | 1-1/2" = 1'-0"

HMC ARCHITECTS
Architecture Interiors Planning
3546 CONCOURS STREET
ONTARIO, CALIFORNIA 91764
Telephone: 909 . 989 . 9979
Fax: 909 . 483 . 1400
www. hmcarchitects .com

KEY PLAN

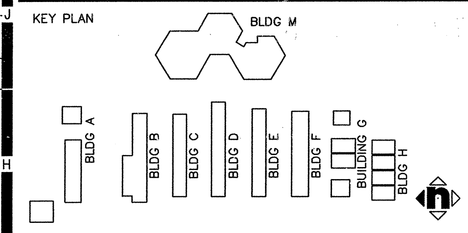

AGENCY APPROVAL

FILE NO. 36-55
IDENTIFICATION STAMP
DIV. OF THE STATE ARCHITECT
OFFICE OF REGULATION SERVICES
APPL. 04-107962
AC_____ FLS_____ SS_____
DATE_____

CONSTRUCTION DOCUMENTS

SAN BERNARDINO CITY UNIFIED SCHOOL DISTRICT
777 NORTH F STREET
SAN BERNARDINO,CA. 92410

© HMC GROUP 2000

No	Revisions/Submissions	Date
1	DSA ADDENDUM NO. 1	08/18/08
3	ADD. NO. 3	2/23/10

Consultant Seal

Consultant

Project Title
BRADLEY ELEMENTARY SCHOOL
MODERNIZATION
SAN BERNARDINO, CA

Drawing Title
DETAILS

Architect Seal
LICENSED ARCHITECT RICHARD LAYNE JOHNSON RIC. NO. C-18755 REN. 02-24-09 STATE OF CALIFORNIA

Designed	Project No
--	3137106
Drawn DL/LJ/EC	Scale AS NOTED
Checked AC	Drawing No
Reviewed JK	A9.6
Date 10-27-06	of

G:\DGN\3137\106\Addendum-1\Sheets\A-9.6.dwg

PLEASE RECYCLE

Aug 12, 2008 - 11:25am

" BID ISSUANCE SET"