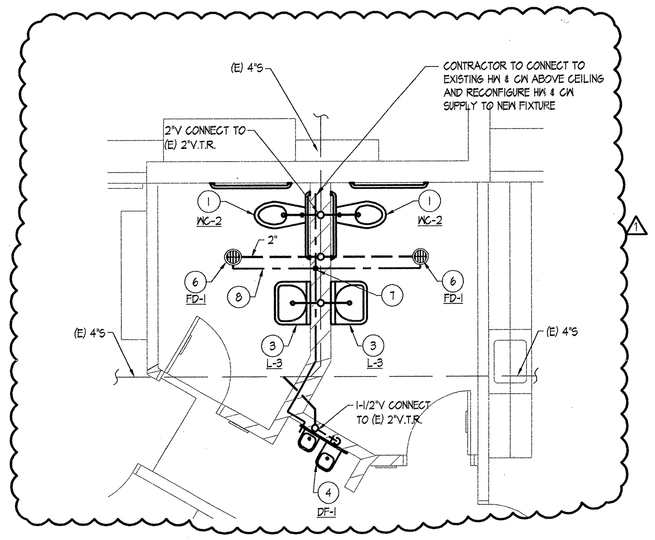

PLUMBING WOMEN'S & MEN'S TOILETS (M106 & M107) - REMODEL | P2
BUILDING M | 1/4"=1'-0"

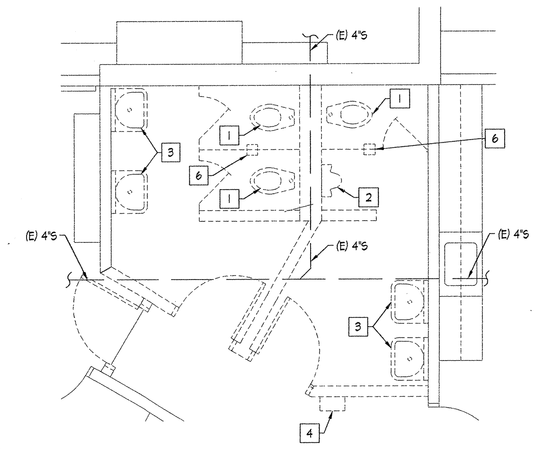

PLUMBING WOMEN'S & MEN'S TOILETS (M106 & M107) - DEMO | P1
BUILDING M | 1/4"=1'-0"

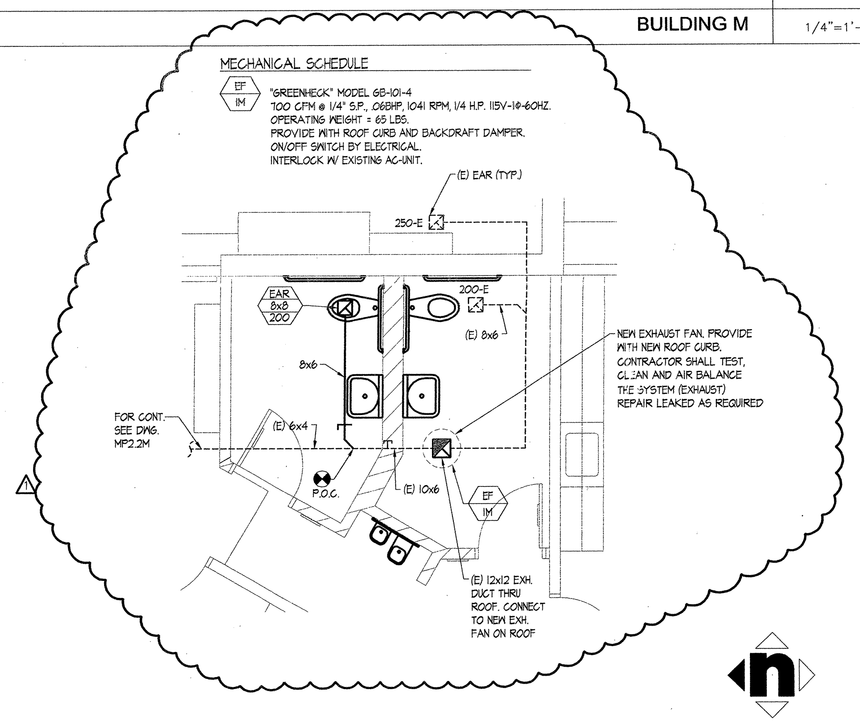

MECHANICAL WOMEN'S & MEN'S TOILETS (M106 & M107) - REMODEL | M2
BUILDING M | 1/4"=1'-0"

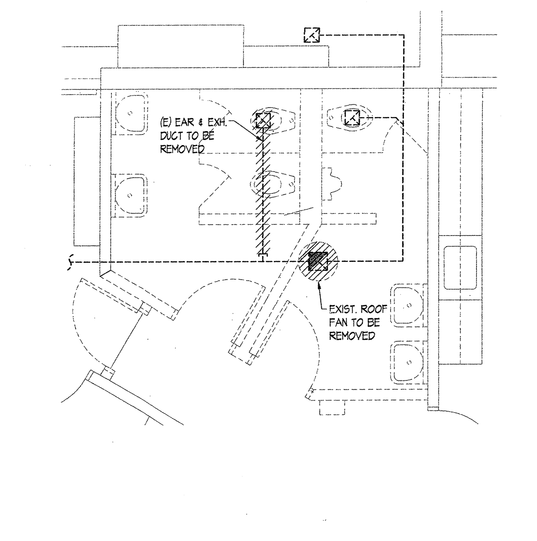

MECHANICAL WOMEN'S & MEN'S TOILETS (M106 & M107) - DEMO | M1
BUILDING M | 1/4"=1'-0"

HMC
Architecture · Interiors · Planning

HMC GROUP
3270 INLAND EMPIRE BLVD
ONTARIO, CALIFORNIA 91764
Telephone: 909 . 989 . 9979
Fax: 909 . 483 . 1400

DEMOLITION NOTES: (NOTE: NOT ALL NOTES LISTED APPLY TO THIS SHEET)

1. REMOVE EXISTING WATER CLOSET AND ALL RELATED APPURTENANCES, RETURN TO OWNER. TEMPORARILY CAP UTILITIES (WATER, SOIL AND VENT PIPING) IN WALL, ABOVE CEILING OR BELOW FLOOR AS REQUIRED TO RECEIVE NEW FIXTURE OR IF FIXTURE IS NOT REPLACED CAP PERMANENTLY.
2. REMOVE EXISTING URINAL AND ALL RELATED APPURTENANCES, RETURN TO OWNER. TEMPORARILY CAP UTILITIES (WATER, SOIL AND VENT PIPING) IN WALL, ABOVE CEILING OR BELOW FLOOR AS REQUIRED TO RECEIVE NEW FIXTURE OR IF FIXTURE IS NOT REPLACED CAP PERMANENTLY.
3. REMOVE EXISTING LAVATORY AND ALL RELATED APPURTENANCES, RETURN TO OWNER. TEMPORARILY CAP UTILITIES (WATER, WASTE AND VENT PIPING) IN WALL, ABOVE CEILING OR BELOW FLOOR AS REQUIRED TO RECEIVE NEW FIXTURE OR IF FIXTURE IS NOT REPLACED CAP PERMANENTLY.
4. REMOVE EXISTING DRINKING FOUNTAIN AND RELATED APPURTENANCES, RETURN TO OWNER. TEMPORARILY CAP UTILITIES (WATER, WASTE, AND VENT PIPING) IN WALL, ABOVE CEILING OR BELOW FLOOR AS REQUIRED TO RECEIVE NEW FIXTURE OR IF FIXTURE IS NOT REPLACED CAP PERMANENTLY.
5. REMOVE EXISTING SINK COMPLETE AND ALL RELATED APPURTENANCES, RETURN TO OWNER. TEMPORARILY CAP UTILITIES (WATER, WASTE, & VENT PIPING) IN WALL, ABOVE CEILING OR BELOW FLOOR AS REQUIRED TO RECEIVE NEW FIXTURE OR IF FIXTURE IS NOT REPLACED CAP PERMANENTLY.
6. REMOVE EXISTING FLOOR DRAIN

REMODEL NOTES: (NOTE: NOT ALL NOTES LISTED APPLY TO THIS SHEET)

1. FURNISH AND INSTALL NEW (PC-1) OR (PC-2) WATER CLOSET. CONNECT TO EXISTING SOIL, VENT & CW. REWORK EXISTING PIPING TO ACCOMMODATE INSTALLATION OF NEW FIXTURE.
2. FURNISH AND INSTALL NEW (U-2) URINAL. CONNECT TO EXISTING SOIL, VENT & CW. REWORK EXISTING PIPING TO ACCOMMODATE INSTALLATION OF NEW FIXTURE.
3. FURNISH AND INSTALL NEW (L-1) OR (L-2) LAVATORIES. CONNECT TO EXISTING WASTE, VENT & CW. REWORK EXISTING PIPING TO ACCOMMODATE INSTALLATION OF NEW FIXTURE.
4. FURNISH AND INSTALL NEW (DF-1) DRINKING FOUNTAINS. CONNECT TO NEAREST WASTE, VENT AND COLD WATER LINES. VERIFY LOCATION IN THE FIELD. SEE ARCH. DWGS. FOR DEMO. & REMODEL OF FINISH.
5. NOT USED
6. FURNISH AND INSTALL NEW FLOOR DRAIN (FD-1) CONNECT 2" DRAIN LINE TO EXISTING SEWER LINE BELOW FLOOR. PROVIDE 1-1/2" VENT FROM FD'S AND CONNECT TO EXISTING VENT IN WALL SPACE.
7. FURNISH AND INSTALL NEW TRAP PRIMER BEHIND WALL ACCESS PANEL.
8. FURNISH AND INSTALL NEW 1/2"CW LINE FROM TRAP PRIMER TO FLOOR DRAIN TRAP PRIMER CONNECTION.

KEY PLAN

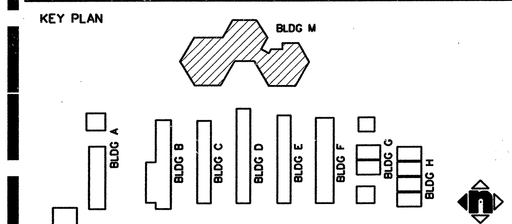

AGENCY APPROVAL

FILE NO. –
IDENTIFICATION STAMP
DIV. OF THE STATE ARCHITECT
OFFICE OF REGULATION SERVICES
APPL.
AC _____ FLS _____ SS _____
DATE _____

SAN BERNARDINO CITY UNIFIED SCHOOL DISTRICT
777 NORTH F STREET
SAN BERNARDINO, CA. 92410

© HMC GROUP 2000

No	Revisions/Submissions	Date
1	ADDENDUM 1	07/31/2008
3	ADD. NO. 3	7/23/10

Consultant Seal

LICENSED ENGINEER
MARIO Z. DEL ROSARIO
No. M-21988
REN. 12/31/07
MECHANICAL
STATE OF CALIFORNIA

Consultant
ACEA, INC.
CONSULTING MECHANICAL ENGINEERS
3270 INLAND EMPIRE BOULEVARD
ONTARIO, CA 91764
Tel. 909/989-9979
Fax 909/989-9980
acea@aceaengineers.com

Project Title
BRADLEY ELEMENTARY SCHOOL
MODERNIZATION
SAN BERNARDINO, CA

Drawing Title
MECH. & PLUMBING BLDG. M
ENLARGED FLR. PLANS

Architect Seal

LICENSED ARCHITECT
JOEY A. KRACELUND
NO. C-27989
REN. 6-30-07
STATE OF CALIFORNIA

Designed MZR	Project No 31.37106
Drawn AEQ	Scale AS NOTED
Checked JVJ	Drawing No
Reviewed MZR	MP4.1M
Date	of

LICENSED ARCHITECT
REN. 02-28-09
STATE OF CALIFORNIA

" BID ISSUANCE SET"