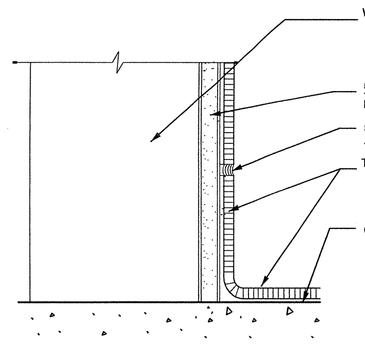

THIN-SET CERAMIC TILE | N4 | HALF

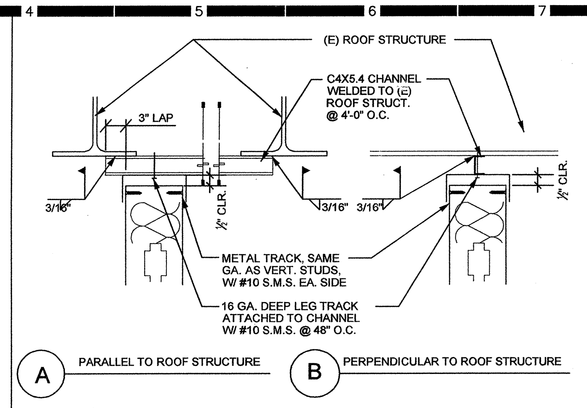

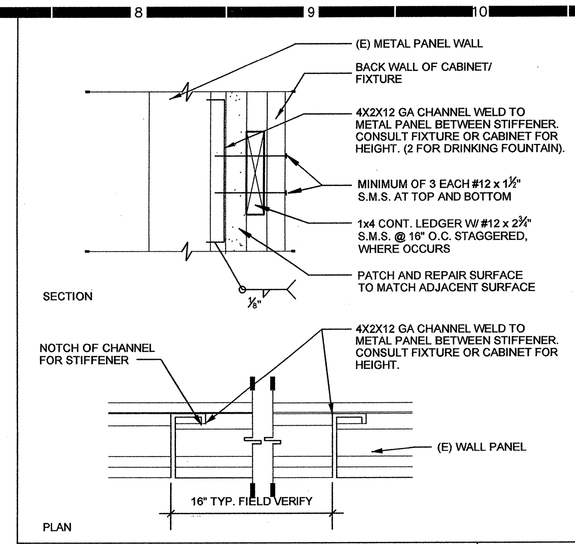

BACKING DETAIL | N11 | 3" = 1'-0"

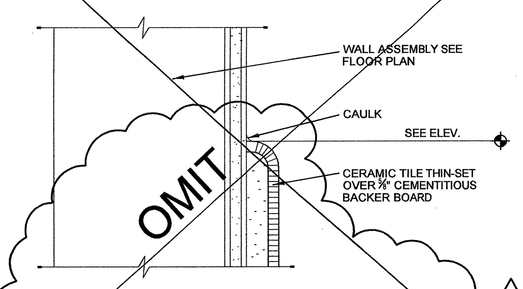

TOP OF WAINSCOT | N14 | HALF

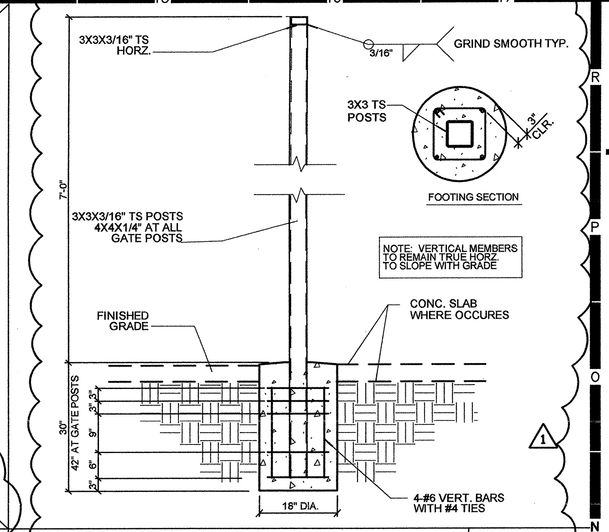

ORNAMENTAL FENCE STEELPOST | N17 | N.T.S.

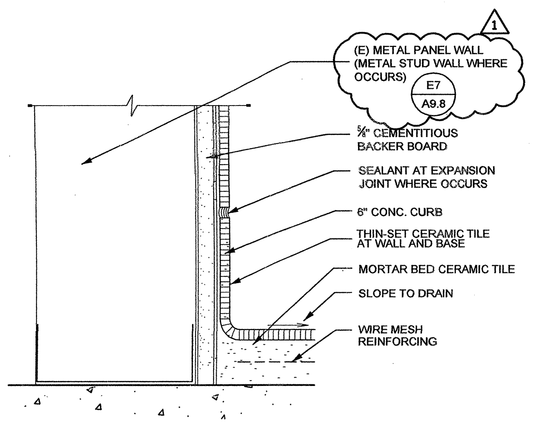

CERAMIC TILE AT METAL WALL PANEL | J4 | HALF

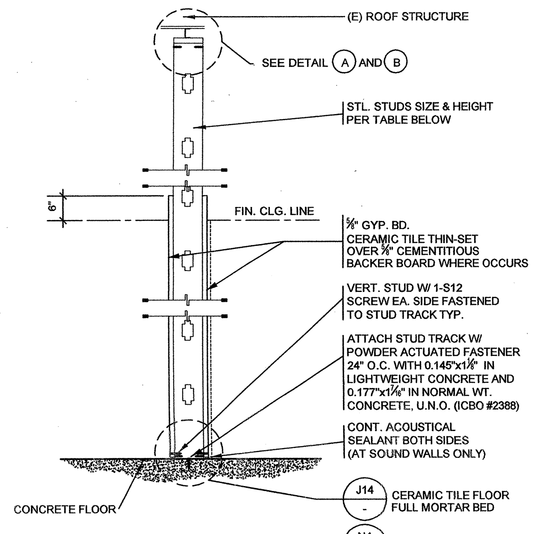

STUD SIZE	SPACING	HEIGHT	REMARKS
4x 20 GA.	16" O.C.	UP TO 15'	W/O CABINETRY
4x 16 GA.	16" O.C.	UP TO 15'	W/ CABINETRY
DBL. 4x 16 GA.	16" O.C.	UP TO 20'	W/ CABINETRY
TRPL. 4x 16 GA.	12" O.C.	UP TO 25'	W/ CABINETRY
6x 16 GA.	16" O.C.	UP TO 20'	W/ CABINETRY
DBL. 6x 16 GA.	16" O.C.	UP TO 25'	W/ CABINETRY

NOTE: SEE SPEC. SECTION 09110 FOR ADDITIONAL INFORMATION.

INTERIOR NON-RATED WALL | J7 | SCALE

NOT USED | J11 | SCALE

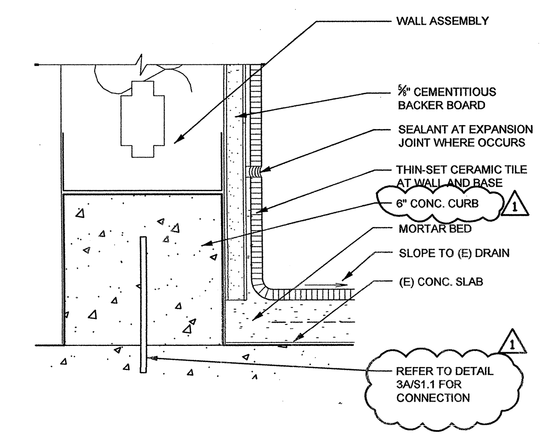

NOTE: PROVIDE THIN-SET CERAMIC TILE AT SINGLE USE TOILETS WHERE NO EXISTING OR NEW FLOOR DRAIN IS SHOWN.

CERAMIC TILE (FULL MORTAR BED) | J14 | HALF

NOT USED | J17 | SCALE

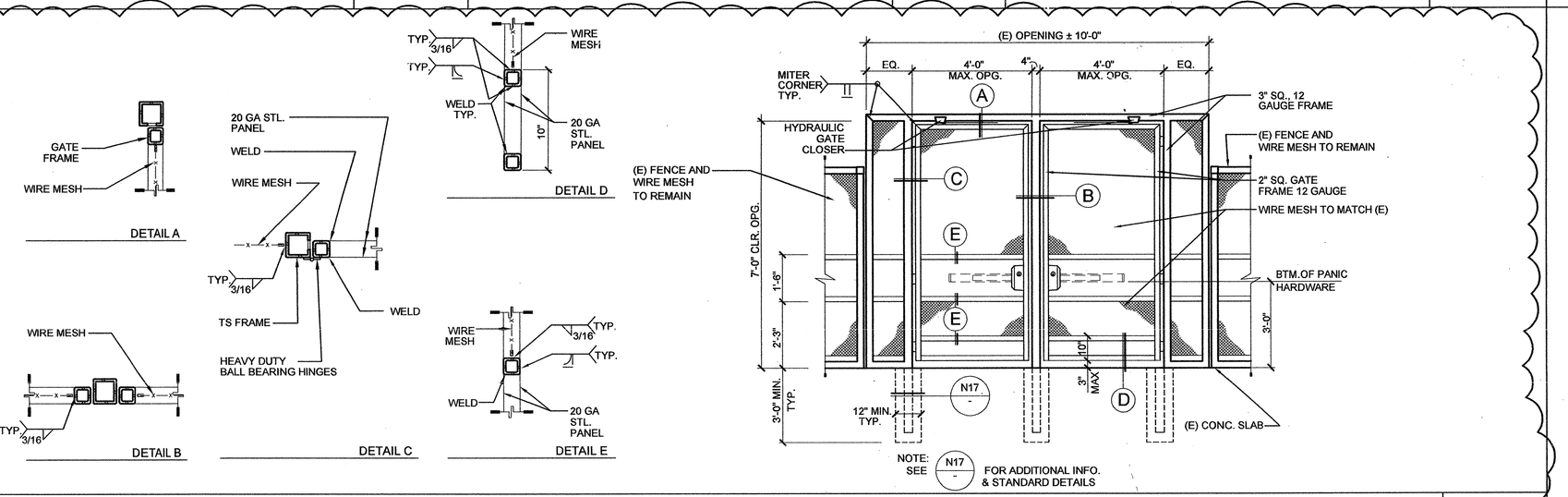

ORNAMENTAL METAL GATE | E11 | N.T.S.

1. CHARACTER TYPE: CHARACTERS ON SIGNS SHALL BE RAISED □INCH (0.794 mm) MINIMUM AND SHALL BE SANS SERIF UPPERCASE CHARACTERS ACCOMPANIED BY GRADE 2 BRAILLE (SEE NOTE 5 BELOW).

2. CHARACTER SIZE: RAISED CHARACTERS SHALL BE A MINIMUM OF □INCH (15.9 mm) AND A MAXIMUM OF 2 INCHES (51mm) HIGH.

3. FINISH AND CONTRAST: CONTRAST BETWEEN CHARACTERS, SYMBOLS AND THEIR BACKGROUND MUST BE 70% MINIMUM AND HAVE A NON- GLARE FINISH. 1117B.5.2

4. PROPORTIONS: CHARACTERS ON SIGNS SHALL HAVE A WIDTH-TO- HEIGHT RATIO OF BETWEEN 3:5 AND 1:1 AND A STROKE WIDTH TO HEIGHT RATIO OF BETWEEN 1:5 AND 1:10 1117B.5.3

ALL LETTERS MEASURED MUST BE UPPERCASE. AFTER CHOOSING A TYPE TO TEST, BEGIN BY PRINTING THE LETTERS I, X, AND O AT 1 INCH HIGH. PLACE THE TEMPLATE'S 1:1 SQUARE OVER THE X OR O, WHICHEVER IS NARROWER. IF THE CHARACTER IS NOT WIDER THAN 1 INCH, NOR NARROWER THAN THE 3:5 RECTANGLE, THE PROPORTIONS ARE CORRECT. USE THE 1:5 RECTANGLE TO DETERMINE IF THE STROKE OF THE I IS TOO BROAD, AND THE 1:10 RECTANGLE TO SEE IF IT IS TOO NARROW. IF THE TESTS ARE PASSED, THE TYPESTYLE IS COMPLIANT WITH PROPORTION CODE.

TEMPLATE FOR CHECKING CHARACTER AND STROKE WIDTH TO HEIGHT PROPORTIONS

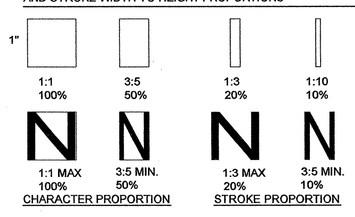

5. BRAILLE: CONTRACTED CALIFORNIA GRADE 2 BRAILLE SHALL BE USED WHEREVER BRAILLE IS REQUIRED IN OTHER PORTIONS OF THESE STANDARDS. DOTS SHALL BE 1/ 10 INCH (2.54 mm) ON CENTERS IN EACH CELL WITH 2/ 10 INCH (5.08 mm) SPACE BETWEEN CELLS, MEASURED M THE SECOND COLUMN OF DOTS IN THE FIRST CELL TO THE FIRST COLUMN OF DOTS IN THE SECOND CELL. DOTS SHALL BE RAISED A MINIMUM OF 1/ 40 INCH (0.635 mm) ABOVE THE BACKGROUND.

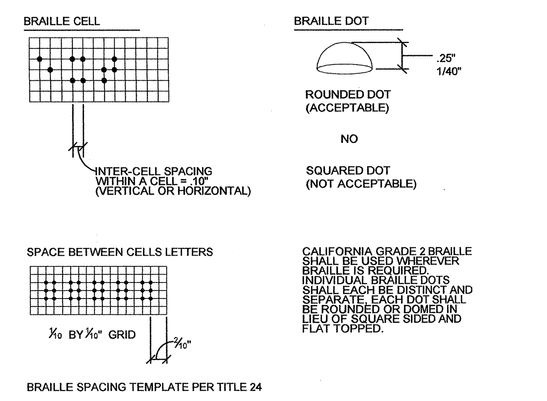

CALIFORNIA GRADE 2 BRAILLE SHALL BE USED WHEREVER BRAILLE IS REQUIRED. INDIVIDUAL BRAILLE DOTS SHALL EACH BE DISTINCT AND SEPARATE. EACH DOT SHALL BE ROUNDED OR DOMED IN LIEU OF SQUARE SIDED AND FLAT TOPPED.

ADA SIGNAGE & BRAILLE NOTES | A14 | N.T.S.

NOT USED | E17 | SCALE

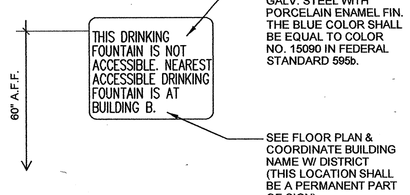

NOT USED | A4 | SCALE

DISABLE PERSON ACCESSIBILITY DIRECTIONAL SIGNAGE | A7 | 3"=1'-0"

NOT USED | A11 | SCALE

NOT USED | A17 | SCALE

HMC ARCHITECTS
3546 CONCOURS STREET
ONTARIO, CALIFORNIA 91764
Telephone: 909 . 989 . 9979
Fax: 909 . 483 . 1400
www. hmcarchitects .com
Architecture Interiors Planning

KEY PLAN

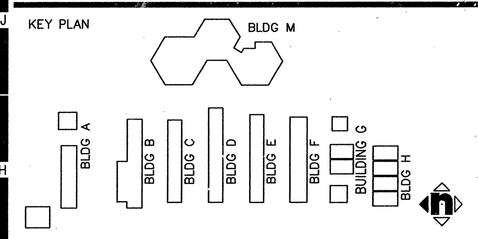

AGENCY APPROVAL

FILE NO. 36-55
IDENTIFICATION STAMP
DIV. OF THE STATE ARCHITECT
OFFICE OF REGULATION SERVICES
APPL. 04-107962
AC ____ FLS ____ SS ____
DATE ____

CONSTRUCTION DOCUMENTS

SAN BERNARDINO CITY UNIFIED SCHOOL DISTRICT
777 NORTH F STREET
SAN BERNARDINO, CA. 92410

© HMC GROUP 2000

No	Revisions/Submissions	Date
1	DSA ADDENDUM NO. 1	08/18/08
3	ADD. NO. 3	2/23/10

Consultant Seal

Consultant

Project Title
BRADLEY ELEMENTARY SCHOOL MODERNIZATION
SAN BERNARDINO, CA

Drawing Title
DETAILS

Architect Seal
LICENSED ARCHITECT CHRISTOPHER MICHAEL TAYLOR C-19759 REN. 02-28-09 STATE OF CALIFORNIA

Designed --	Project No 3137106
Drawn DL/LJ/EC	Scale AS NOTED
Checked AC	Drawing No
Reviewed JK	A9.4
Date 10-27-06	of

G:\DGN\3137\106\Addendum-1\Sheets\A-9.4.dwg

PLEASE RECYCLE

Aug 13, 2008 - 9:35am

" BID ISSUANCE SET"