HMC ARCHITECTS
Architecture Interiors Planning
3546 CONCOURS STREET
ONTARIO, CALIFORNIA 91764
Telephone: 909 . 989 . 9979
Fax: 909 . 483 . 1400
www. hmcarchitects .com

NOT USED — N4 — SCALE

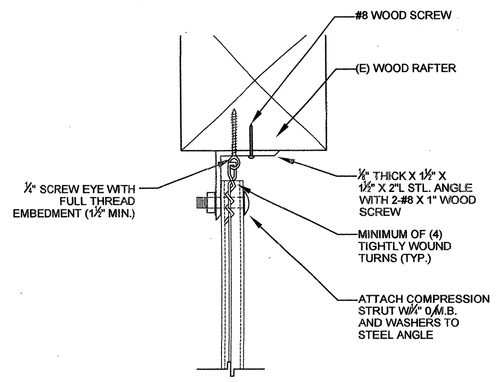

COMPRESSION STRUT — J4 — HALF

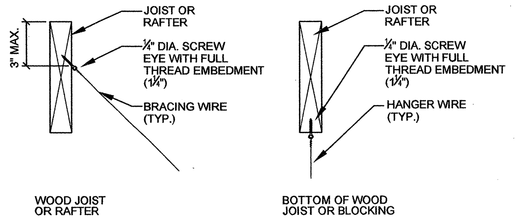

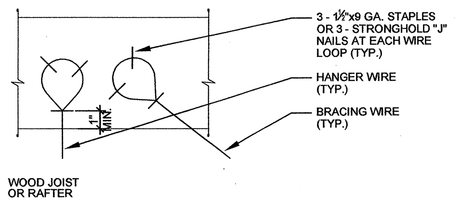

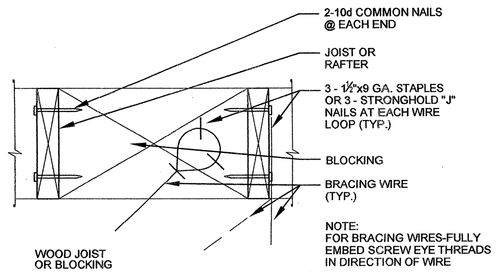

NOTE:
FOR BRACING WIRES-FULLY EMBED SCREW EYE THREADS IN DIRECTION OF WIRE

HANGER / SPLAYED WIRE CONNECTION — J11 — N.T.S.

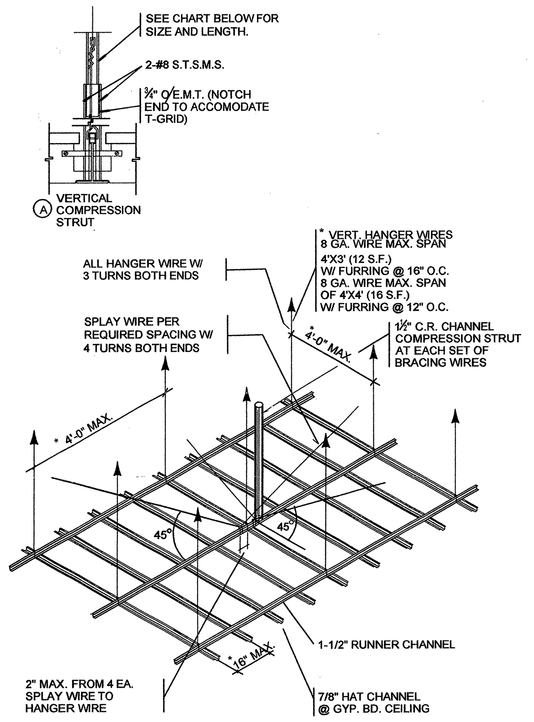

NOTE:
COMPRESSION STRUTS: STEEL SECTION WITH L/R RATIO OF 200 MAX. STARTING NOT MORE THAN 4'-0" FROM ADJACENT WALLS TO SUPPORT A TRIBUTARY AREA OF 144 S.F. FOR SCHOOLS. ATTACH TO MAIN RUNNER & TO STRUCTURE PER DETAIL J4 (1)
COMPRESSION STRUT SHALL NOT REPLACE HANGER WIRE.

COMPRESSION STRUT SCHEDULE			
PIPE SIZE			PIPE LENGTH
E.M.T.	OD	ID	L MAX
1/2"	.840	.622	52"
3/4"	1.050	.824	66"
1"	1.315	1.049	84"
1 1/4"	1.660	1.380	107"
1 1/2"	1.900	1.610	124"
L=200R	$R=(OD^2-ID^2)^2/4^{1/2}$		$L=200(OD^2-ID^2)^2/4^{1/2}$

SUSPENDED GYPSUM BOARD CEILING FRAMING — J10 — N.T.S.

NOT USED — N14 — SCALE

NOT USED — N17 — SCALE

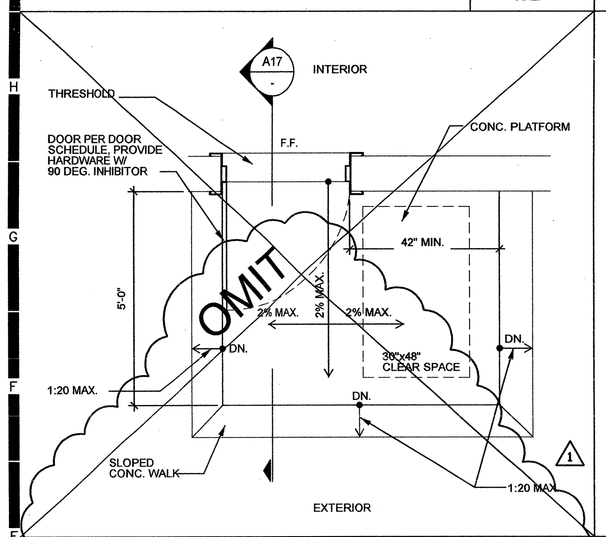

EXTERIOR DOOR SILL (SLOPED WALK) - PLAN VIEW — E4 — N.T.S.

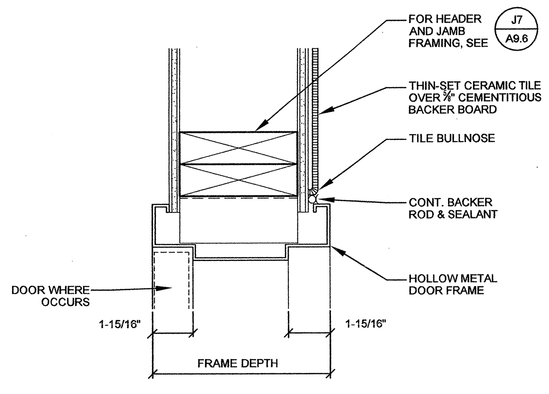

DOOR HEAD AT CERAMIC TILE JAMB SIMILAR — E7 — 3" = 1'-0"

NOT USED — E10 — SCALE

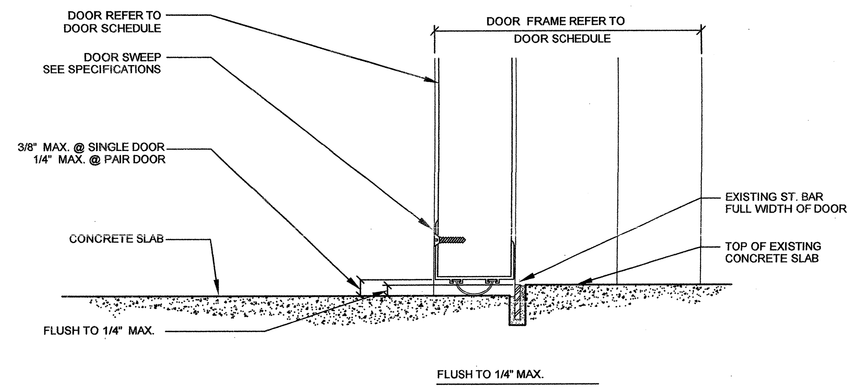

FLUSH TO 1/4" MAX.

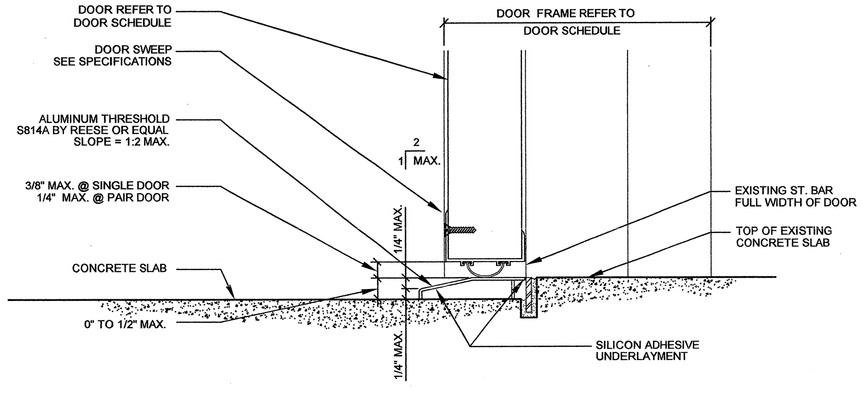

1/4" MIN. TO 1/2" MAX.

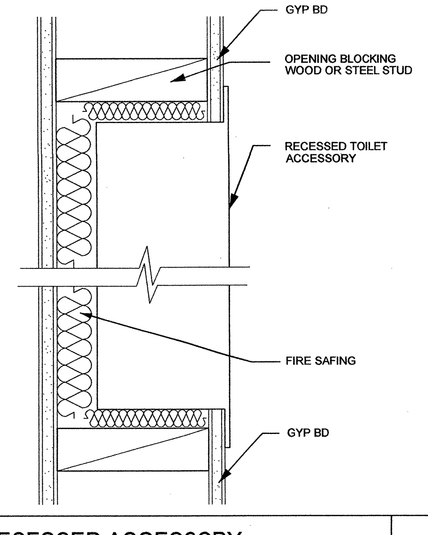

RECESSED ACCESSORY — A4 — HALF

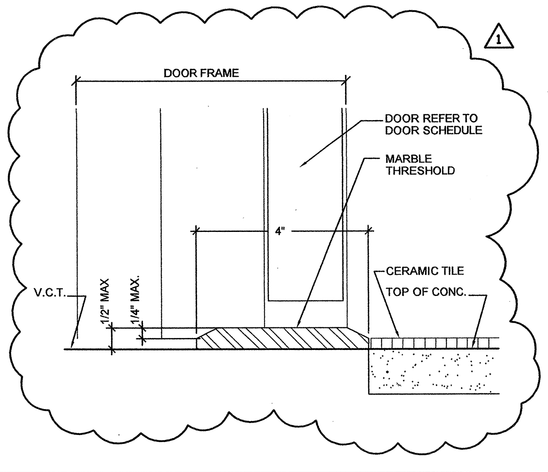

DOOR SILL - VCT TO TILE — A7 — 3" = 1'-0"

NOT USED — A10 — SCALE

CONTRACTOR TO VERIFY THRESHOLD HEIGHT IN FIELD.

NOTE FOR (E) DOOR:
SAWCUT BOTTOM OF (E) DOOR TO ACCOMODATE THRESHOLD & CHANNEL. REMOVE AND REINSTALL KICK PLATE AND DOOR SWEEP WHERE OCCURS

EXTERIOR DOOR THRESHOLD ACCESS — A17 — N.T.S.

KEY PLAN

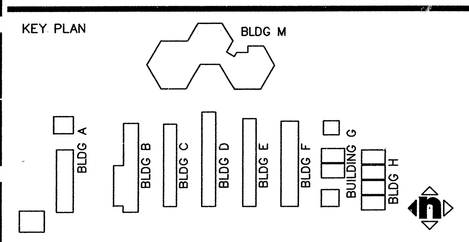

AGENCY APPROVAL

FILE NO. 36-55
IDENTIFICATION STAMP
DIV. OF THE STATE ARCHITECT
OFFICE OF REGULATION SERVICES
APPL. 04-107962
AC. ____ FLS ____ SS ____
DATE ____

CONSTRUCTION DOCUMENTS

SAN BERNARDINO CITY UNIFIED SCHOOL DISTRICT
777 NORTH F STREET
SAN BERNARDINO, CA. 92410

© HMC GROUP 2000

No	Revisions/Submissions	Date
1	DSA ADDENDUM NO. 1	08/18/08
3	ADD NO. 3	2/23/10

Consultant Seal
Consultant

Project Title
BRADLEY ELEMENTARY SCHOOL MODERNIZATION
SAN BERNARDINO, CA

Drawing Title
DETAILS

Architect Seal
LICENSED ARCHITECT
CHRISTOPHER JOHN KIRKPATRICK
CIR. NO. C-19799
REN. 02-24-09
STATE OF CALIFORNIA

Designed	Project No
--	3137106
Drawn DL/LJ/EC	Scale AS NOTED
Checked AC	Drawing No A9.7
Reviewed JK	
Date 10-27-06	of

G:\DGN\3137\106\Addendum-1\Sheets\A-9.7.dwg

PLEASE RECYCLE

Aug 12, 2008 - 11:25am

" BID ISSUANCE SET"