NOT USED

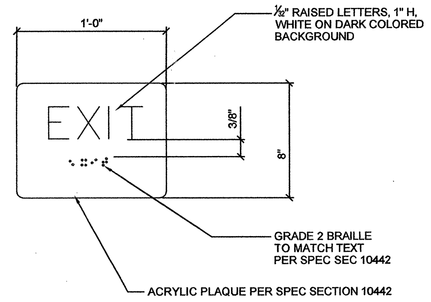

NOTE:
SEE N14/A9.3 FOR MOUNTING LOCATION

EXIT SIGN — N7

N.T.S.

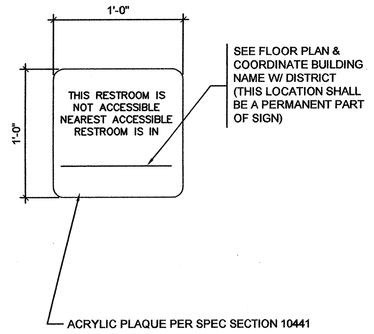

NOTE:
1. SIGN MATERIAL SHALL BE 1/8" THICK PLASTIC WITH 1/32" RAISED BORDER AND LETTERS. ATTACH WITH SILICONE ADHESIVE AND NON-CORROSIVE, VANDAL RESISTANT FASTENERS.

DISABLE PERSON ACCESSIBILITY DIRECTIONAL SIGNAGE — N11

1-1/2" = 1'-0"

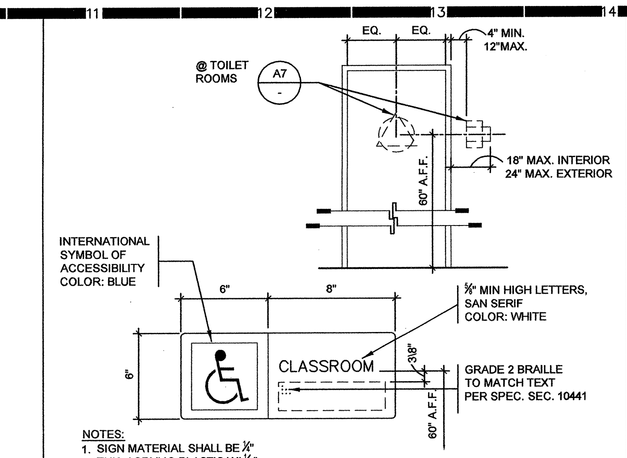

NOTES:
1. SIGN MATERIAL SHALL BE 1/8" THK. ACRYLIC PLASTIC W/ 1/32" RAISED GRAPHIC AND LETTERS PROVIDE MECHANICAL MOUNTING W/ VANDAL RESISTANT FASTENERS. COMPLY W/ ARTICLE 4.30 & A4.30 OF ADAAG.
2. PROVIDE SIGN WHERE INDICATED ON SCHEDULE. LOCATE SIGN MAX. 12" AWAY FROM DOOR STRIKE SIDE. ALL SIGNED DOORS TO RECEIVE BRAILLE ROOM IDENTIFICATION.

ROOM IDENTIFICATION — N14

3" = 1'-0"

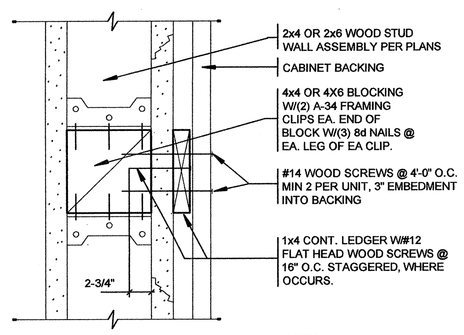

NOTES:
1. BLOCKING WIDTH TO MATCH STUD WIDTH.
2. PATCH & REFINISH TO MATCH EXISTING MATERIALS & WORKMANSHIP, TYP.

CASEWORK /GRAB BAR BACKING DETAIL — N17

HALF

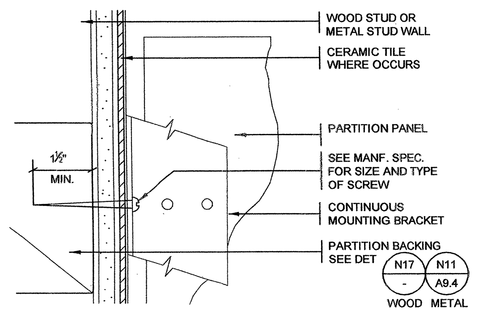

NOTES:
1. FOR FLOOR ATTACHMENT, SEE A4 E4
2. VERIFY W/ PARTITION MFR. FOR BACKING LOCATIONS.

PARTITION ANCHORAGE — J4

HALF

NOTE:
ATTACH SIGNS W/ SILICONE ADHESIVE & NON-CORROSIVE, VANDAL RESISTANT FLAT HEAD SCREWS

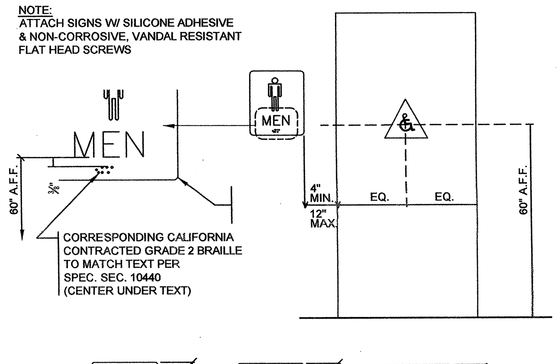

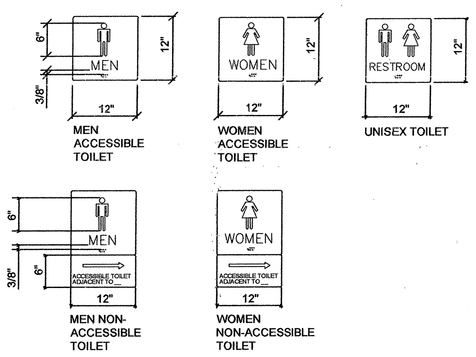

TOILET ROOM WALL SIGNAGE

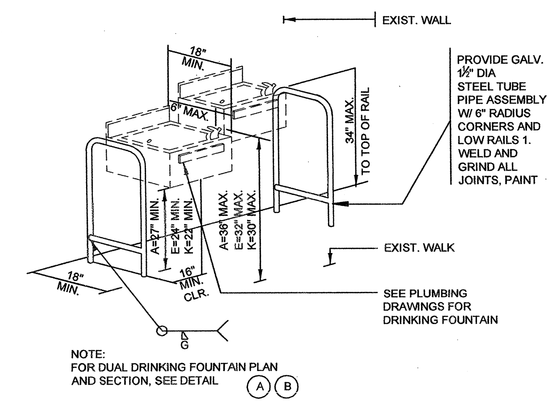

NOTE:
FOR DUAL DRINKING FOUNTAIN PLAN AND SECTION, SEE DETAIL A B

NOTE:
ALL 1 1/2"Ø O.D. GALV PIPE TO BE 1 11/4" NOMINAL SIZE, SCHEDULE 40. 1.66 INCH OUTSIDE DIA. WALL THK OF 0.1400" GRADE B. ROUND STRUCTURAL TUBING, TYP.

MIRROR CONNECTION TO WALL — J14

3" = 1'-0"

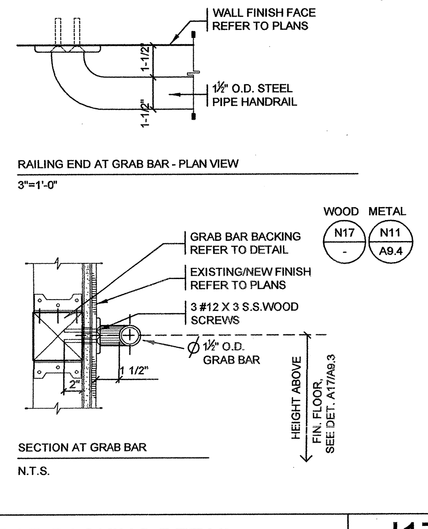

GRAB BAR BACKING DETAIL — J17

3" = 1'-0"

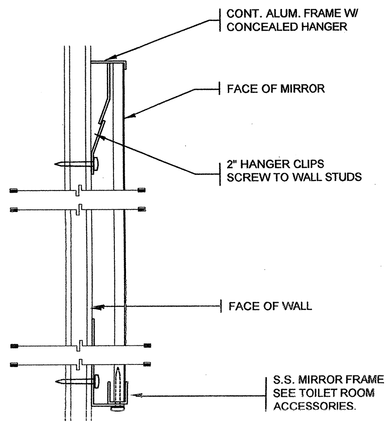

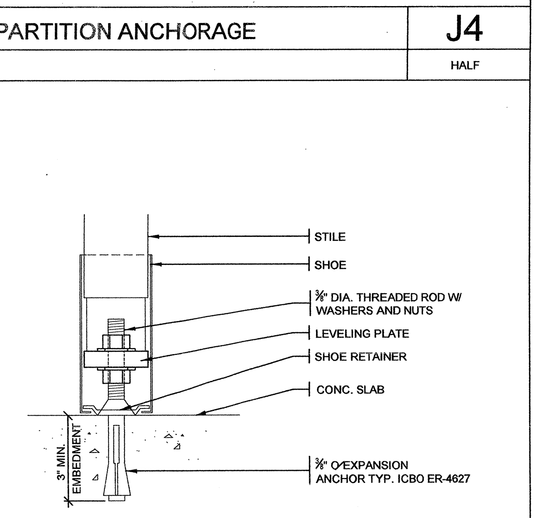

FLOOR MOUNTED TOILET PARTITION - SIDE VIEW — E4

HALF

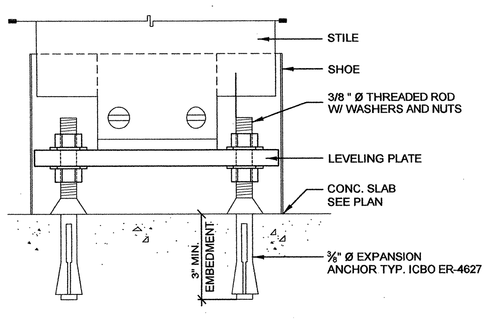

FLOOR MOUNTED TOILET PARTITION - FRONT VIEW — A4

HALF

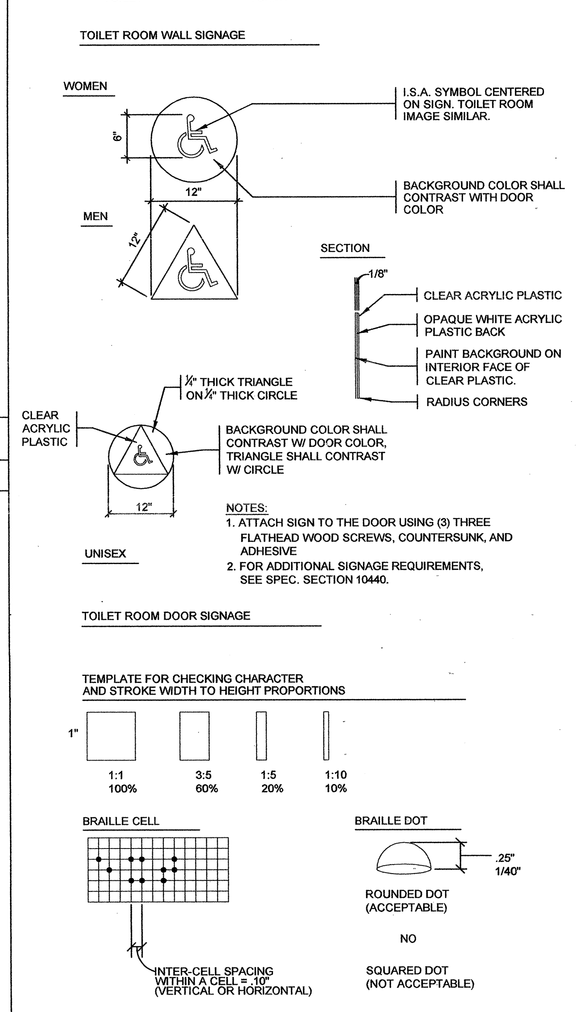

TOILET ROOM WALL AND DOOR SIGNAGE — A7

N.T.S.

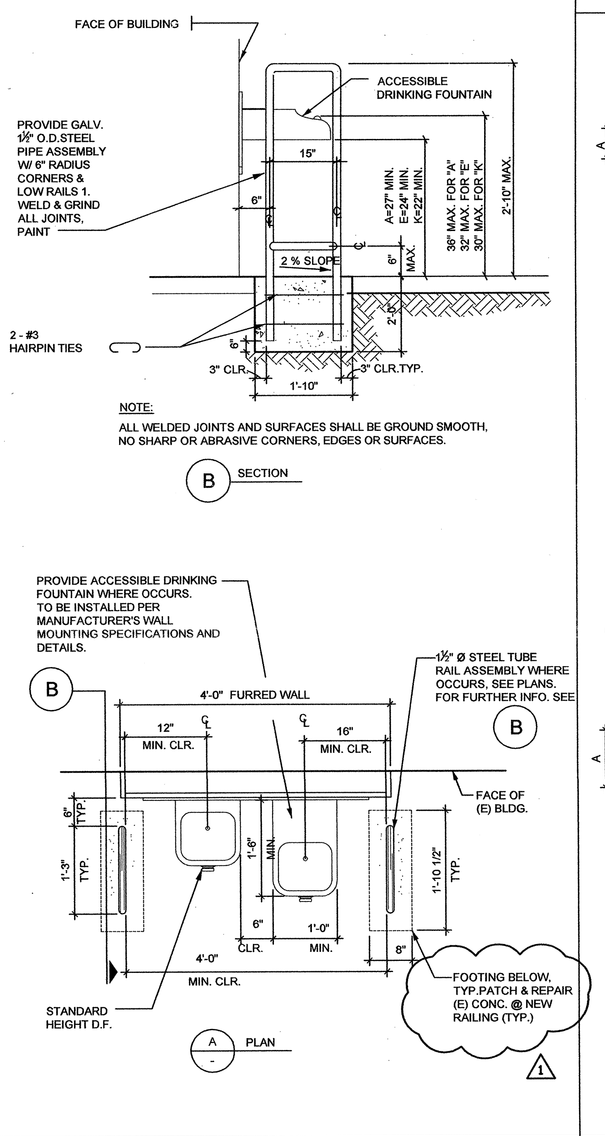

ACCESSIBLE DRINKING FOUNTAIN PLAN / SECTION — A11

N.T.S.

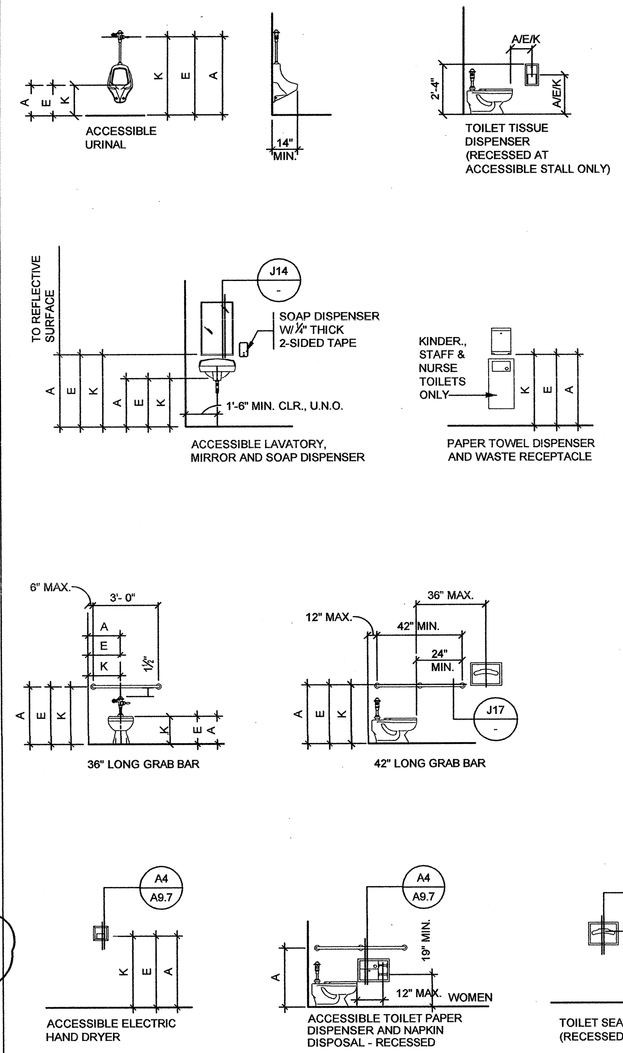

DIMENSION	A	E	K
TOILET CENTERLINE FROM WALL	18" ABS.	15" ABS.	12" ABS.
TOILET SEAT HEIGHT (TOP OF SEAT)	17"-19"	15"	11"-12"
GRAB BAR HEIGHT	33"	27"	20"-22"
TOILET PAPER IN FRONT OF TOILET	12" MAX.	6" MAX.	6" MAX.
NAPKIN DISPOSAL IN FRONT OF TOILET	12" MAX.	12" MAX.	N/A
SANITARY DISPENSER HEIGHT	40" MAX.	36" MAX.	32" MAX.
MIRROR HEIGHT (TO BOT. OF GLASS)	40" MAX.	*36" MAX.	32" MAX.
LAVATORY/SINK TOP HEIGHT	34" MAX.	31" MAX.	26" MAX.
LAVATORY/SINK KNEE CLEARANCE	27" MIN.	24" MIN.	19" MIN.
URINAL LIP HEIGHT	13"-17"	13"-15"	14" +/- 1"
URINAL FLUSH HANDLE HEIGHT	44" MAX.	37" MAX.	32" MAX.
DRINKING FOUNTAIN BUBBLER HEIGHT	36" MAX.	32" MAX.	30" MAX.
DRINKING FOUNTAIN KNEE CLEARANCE	27" MIN.	24" MIN.	22" MIN.
RAMP/STAIR HANDRAIL HEIGHT	34"-38"	27"	22"
ELECTRIC HAND DRYER	40" MAX.	36" MAX.	32" MAX.

A = ADULT DIMENSIONS (AGE 12 AND OVER)
E = ELEMENTARY DIMENSIONS
K = KINDERGARTEN AND PRE-SCHOOL DIMENSIONS
* PER CBC TABLE 1115B-1

NOTES:

SEE PLANS AND INTERIOR ELEVATIONS FOR SIZE, LOCATION AND SPECIAL CONDITIONS.

SEE SPECIFICATIONS FOR MANUFACTURER OF TOILET FIXTURE AND ACCESSORIES

VERIFY ALL ACCESSORY SIZES AND DIMENSIONS WITH APPROVED MANUFACTURER'S SHOP DRAWINGS.

ALL RECESSED ACCESSORIES SHALL HAVE WALL STUD FRAMING AS CALLED FOR BY THE PLAN.

ALL BACKING FOR ACCESSORIES SHALL BE AS REQUIRED BY ARCHITECTURAL DETAIL.

MAINTAIN 4" MAXIMUM PROJECTION FROM WALL OR TOILET COMPARTMENT OF ALL ACCESSORIES (3" MAX. FOR TOILET PAPER DISPENSER/SANITARY NAPKIN DISPOSAL IN ACCESSIBLE TOILET STALLS).

HOT WATER & DRAIN PIPES UNDER ACCESSIBLE LAVATORIES SHALL BE INSULATED OR OTHERWISE COVERED. THERE SHALL BE NO SHARP OR ABRASIVE SURFACES UNDER LAVATORIES.

FAUCET CONTROLS & OPERATING MECHANISMS SHALL BE OPERABLE WITH ONE HAND & SHALL NOT REQUIRE TIGHT GRASPING, PINCHING OR TWISTING OF THE WRIST. THE FORCE REQUIRED TO ACTIVATE CONTROLS SHALL BE NO GREATER THAN 5 lb/ft. LEVER OPERATED, PUSH-TYPE & ELECTRONICALLY CONTROLLED MECHANISMS ARE EXAMPLES OF ACCEPTABLE DESIGNS. SELF-CLOSING VALVES ARE ALLOWED IF THE FAUCET REMAINS OPEN FOR AT LEAST 10 SECONDS.

TOILET ACCESSORIES MOUNTING HEIGHTS — A17

1/4" = 1'-0"

HMC ARCHITECTS
Architecture Interiors Planning
3546 CONCOURS STREET
ONTARIO, CALIFORNIA 91764
Telephone: 909 . 989 . 9979
Fax: 909 . 483 . 1400
www. hmcarchitects .com

KEY PLAN

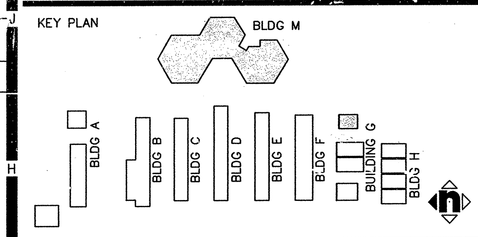

AGENCY APPROVAL

FILE NO. 36-55
IDENTIFICATION STAMP
DIV. OF THE STATE ARCHITECT
OFFICE OF REGULATION SERVICES
APPL. 04-107962
AC. _____ FLS _____ SS _____
DATE _____

CONSTRUCTION DOCUMENTS

SAN BERNARDINO CITY UNIFIED SCHOOL DISTRICT
777 NORTH F STREET
SAN BERNARDINO, CA. 92410

© HMC GROUP 2000

No	Revisions/Submissions	Date
1	DSA ADDENDUM NO. 1	08/18/08
3	ADD. NO. 3	2/23/09

Consultant Seal

Consultant

Project Title
BRADLEY ELEMENTARY SCHOOL MODERNIZATION
SAN BERNARDINO, CA

Drawing Title
DETAILS

Architect Seal
LICENSED ARCHITECT
CHRISTOPHER KIRKBY
LIC. NO. C-19759
REN. 02-24-09
STATE OF CALIFORNIA

Designed	Project No
--	3137106
Drawn DL/LJ/EC	Scale AS NOTED
Checked AC	Drawing No A9.3
Reviewed JK	
Date 10-27-06	of

G:\DGN\3137\106\Addendum-1\Sheets\A-9.3.dwg

PLEASE RECYCLE

Aug 12, 2008 - 11:25am

" BID ISSUANCE SET"