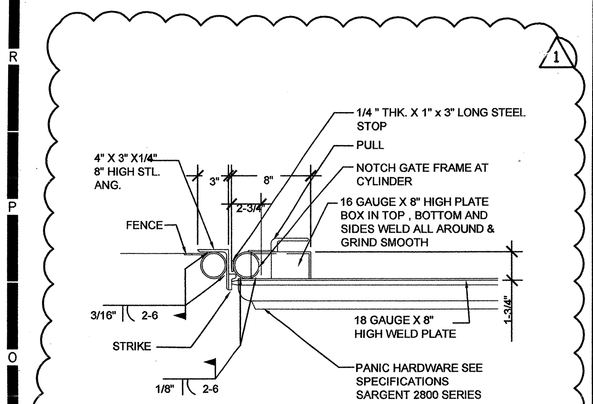

PANIC HARDWARE AT GATE — N4 — N.T.S.

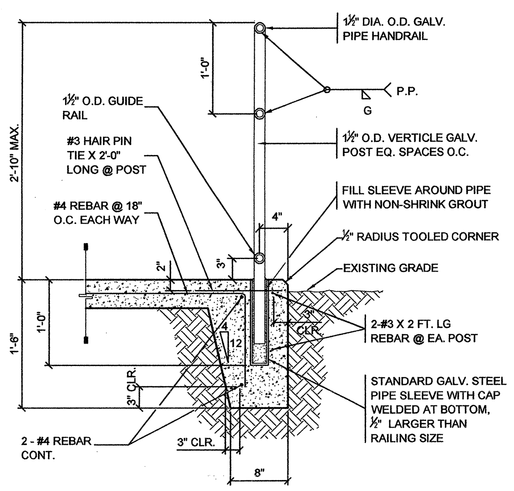

HANDRAIL DETAIL — N7 — 1"=1'-0"

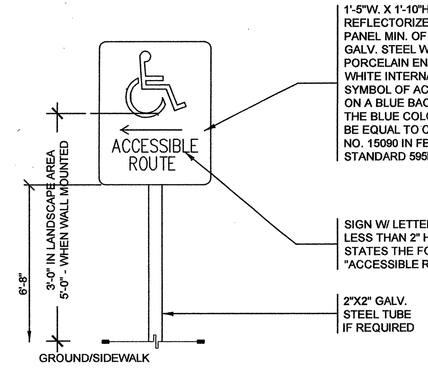

SITE ACCESSIBILITY ROUTE SIGNAGE — N11 — 3/4" = 1'-0"

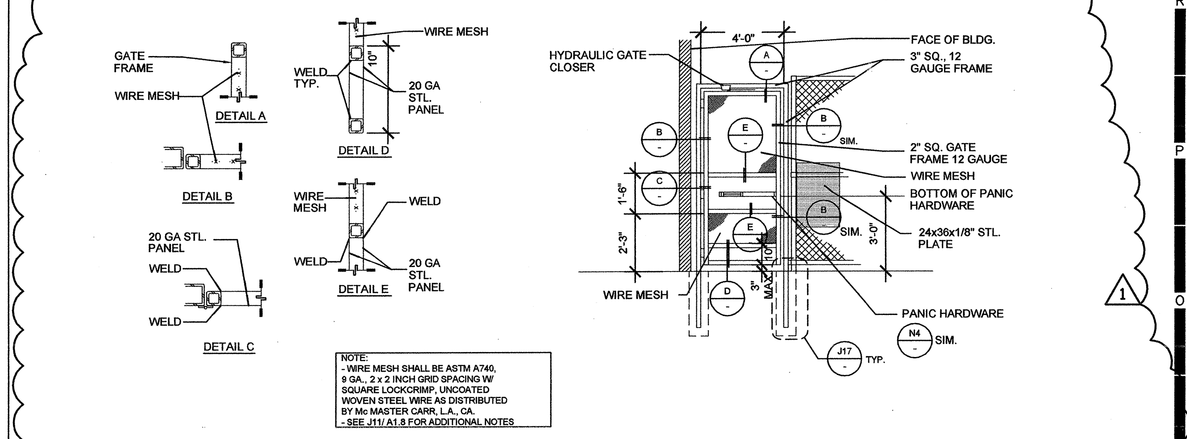

GATE WITH PANIC HARDWARE — N17 — N.T.S.

NOT USED — J4 — SCALE

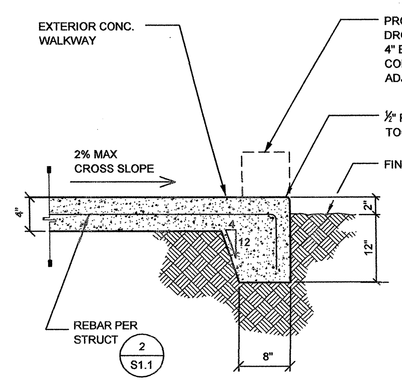

TYPICAL CONCRETE SIDEWALK EDGE — J7 — 1"=1'-0"

NOT USED — J11 — SCALE

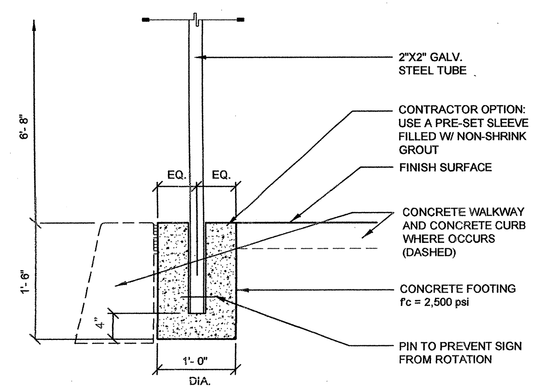

CONCRETE FOOTING — J14 — 3/4" = 1'-0"

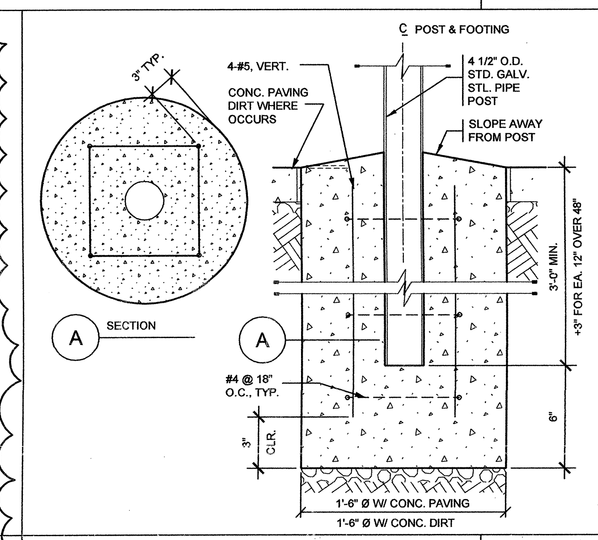

TYP. POST FOOTING DETAIL — J17 — N.T.S.

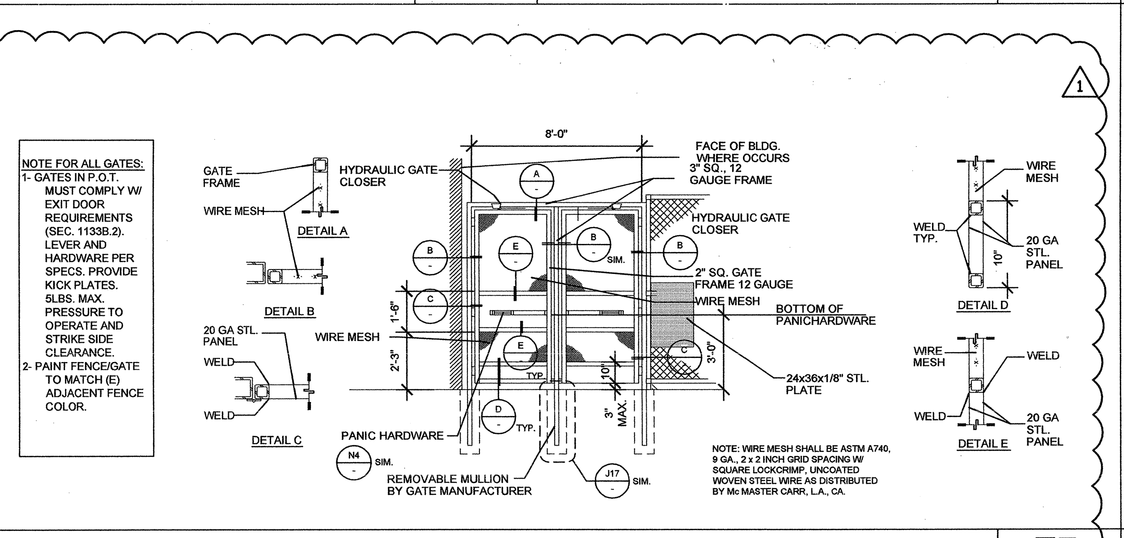

GATE WITH PANIC HARDWARE — E7 — N.T.S.

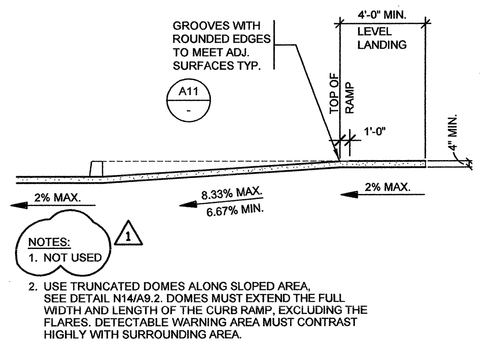

CURB CUT SECTION — E11 — N.T.S.

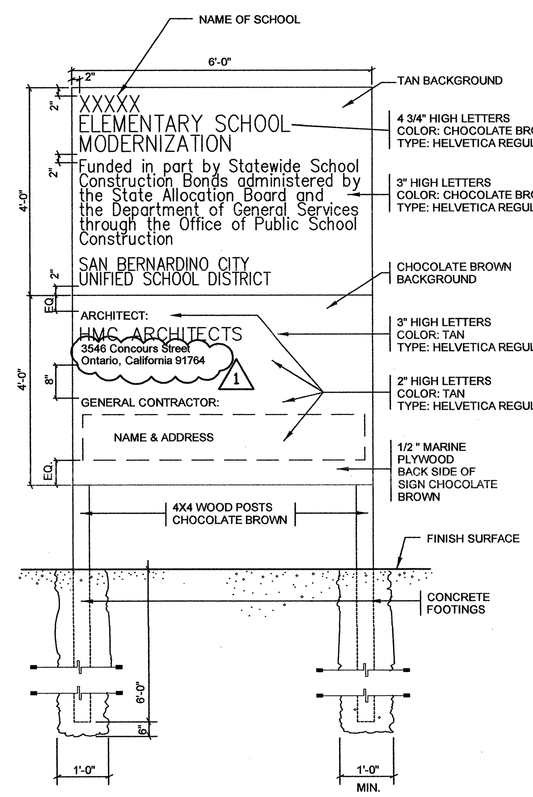

CONSTRUCTION SIGN — A14 — N.T.S.

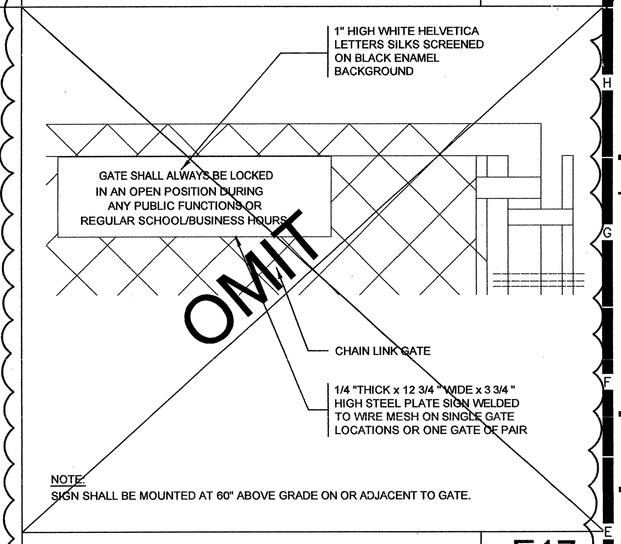

SITE ACCESS GATE SIGNAGE — E17 — 1-1/2" = 1'-0"

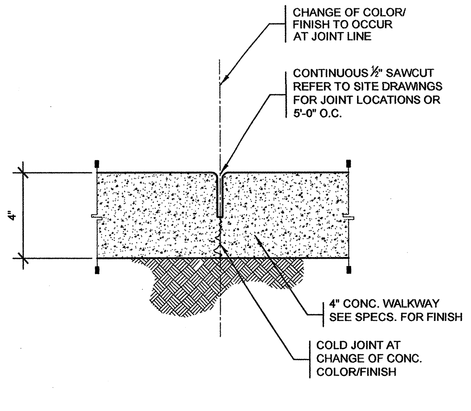

SIDEWALK CONTROL JOINT — A4 — N.T.S.

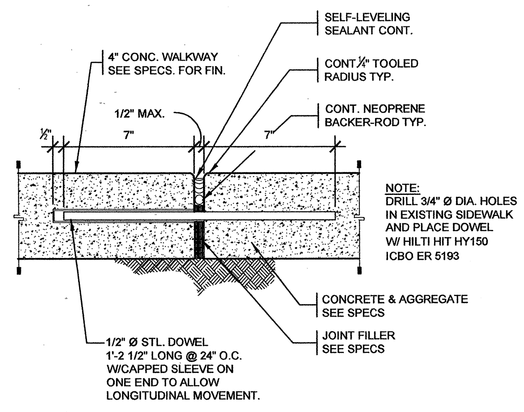

CONCRETE EXPANSION JOINT — A7 — 3" = 1'-0"

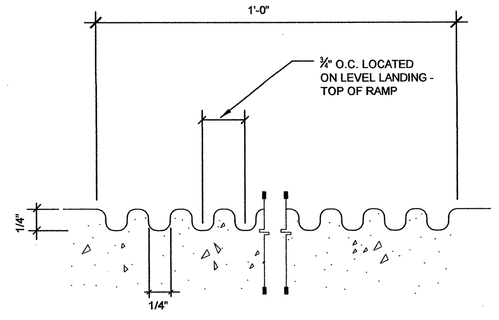

GROOVING DETAIL — A11 — FULL

NOT USED — A17 — SCALE

HMC ARCHITECTS
3546 CONCOURS STREET
ONTARIO, CALIFORNIA 91764
Telephone: 909 . 989 . 9979
Fax: 909 . 483 . 1400
www. hmcarchitects .com
Architecture Interiors Planning

KEY PLAN

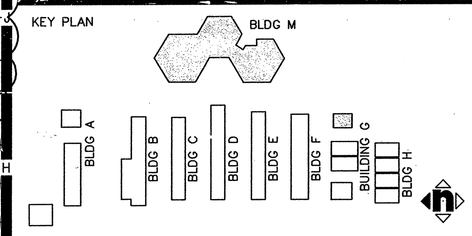

AGENCY APPROVAL

FILE NO. 36-55
IDENTIFICATION STAMP
DIV. OF THE STATE ARCHITECT
OFFICE OF REGULATION SERVICES
APPL. 04-107962
AC. ____ FLS ____ SS ____
DATE ____

CONSTRUCTION DOCUMENTS

SAN BERNARDINO CITY UNIFIED SCHOOL DISTRICT
777 NORTH F STREET
SAN BERNARDINO,CA. 92410

© HMC GROUP 2000

No	Revisions/Submissions	Date
1	DSA ADDENDUM NO. 1	08/18/08
2	ADD. NO. 3	2/23/10

Consultant Seal | Consultant

Project Title
BRADLEY ELEMENTARY SCHOOL MODERNIZATION
SAN BERNARDINO, CA

Drawing Title
DETAILS

Architect Seal: LICENSED ARCHITECT — CHRISTOPHER RICHARD TAYLOR — C-18759 — REN. 02-24-09 — STATE OF CALIFORNIA

Designed	--
Drawn	DL/LJ/EC
Checked	AC
Reviewed	JK
Date	10-27-06
Project No	3137106
Scale	AS NOTED
Drawing No	A9.1
of	

C:\Documents and Settings\itapia\Local Settings\Temp\AcPublish_3828\A-9.1.dwg

PLEASE RECYCLE

Aug 12, 2008 - 11:25am

" BID ISSUANCE SET"