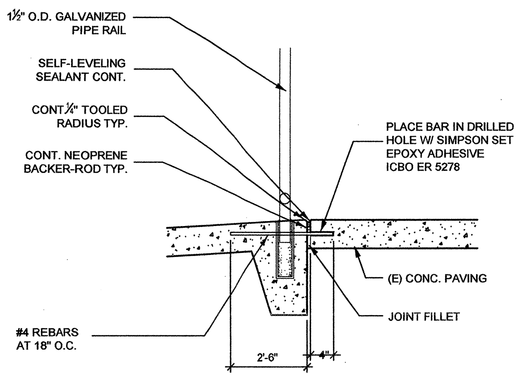

EXPANSION JOINT DETAIL — N4

1"=1'-0"

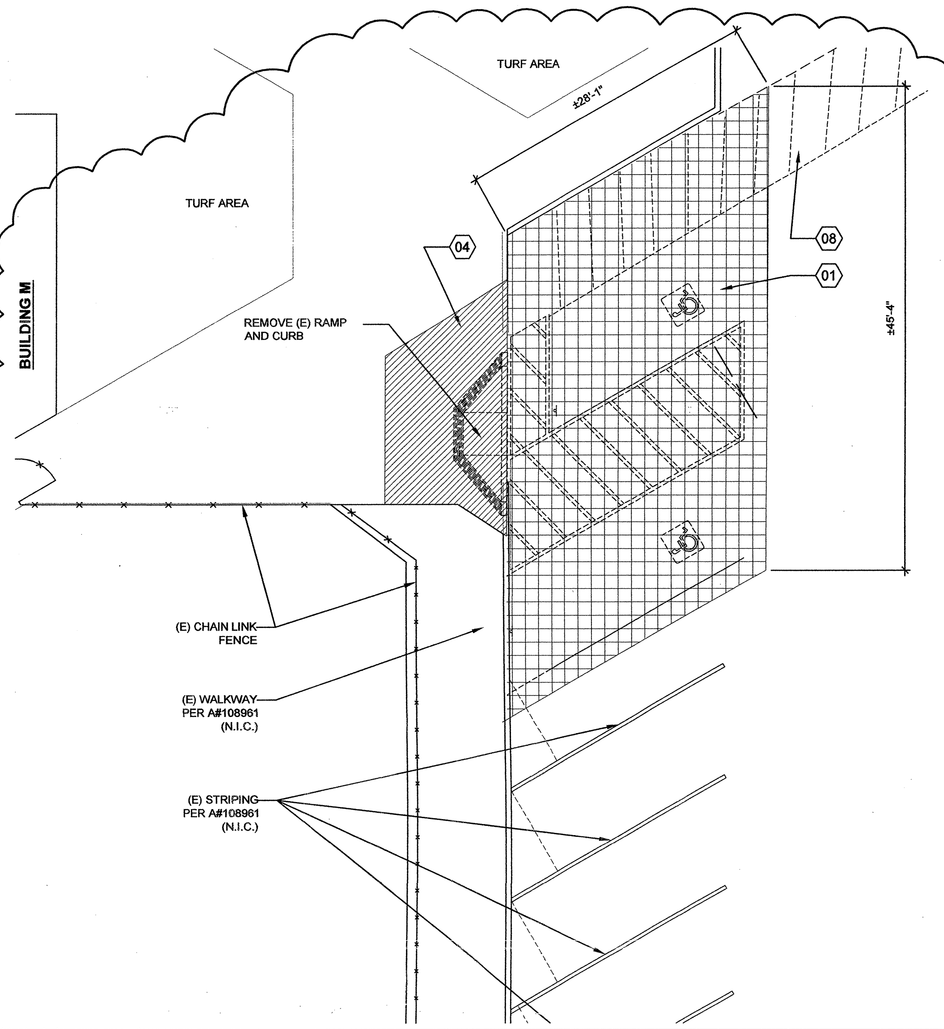

DEMOLTION PLAN AT CURB RAMP — J10

1/8"=1'-0

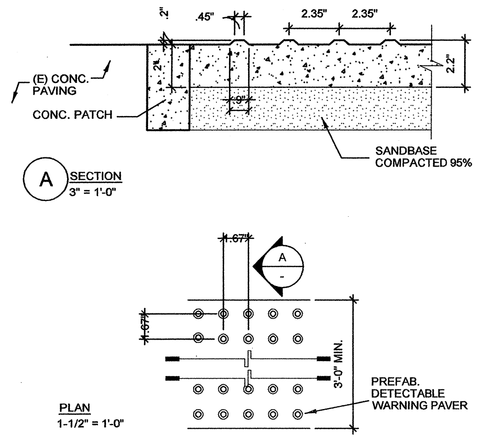

DETECTABLE WARNING PAVER TRUNCATED DOMES — N14

AS NOTED

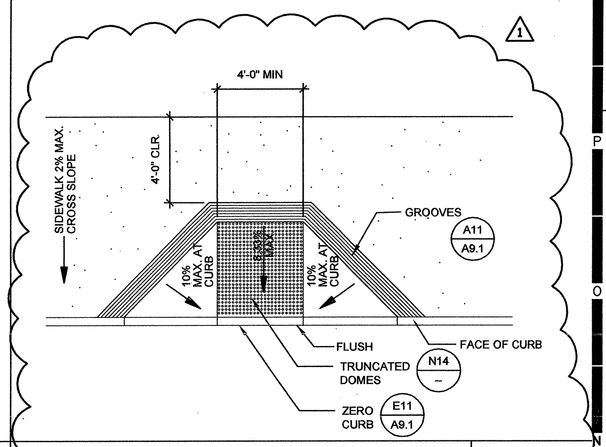

CURB CUT — N17

1/4"=1'-0"

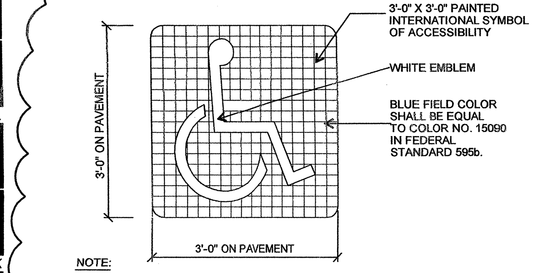

NOTE:

GRID LINES ARE SHOWN FOR PROPORTION ONLY AND ARE NOT TO APPEAR AS PART OF SYMBOL.
ACCESSIBLE SIGNAGE SHALL COMPLY WITH SECTION 3107 CALIFORNIA BUILDING CODE.
SYMBOL SHALL BE LOCATED SO THAT IT IS VISIBLE TO A TRAFFIC ENFORCEMENT OFFICER WHEN A VEHICLE IS PARKED IN THE SPACE.

INTERNATIONAL SYMBOL OF ACCESSIBILITY — J4

3/4"=1'-0"

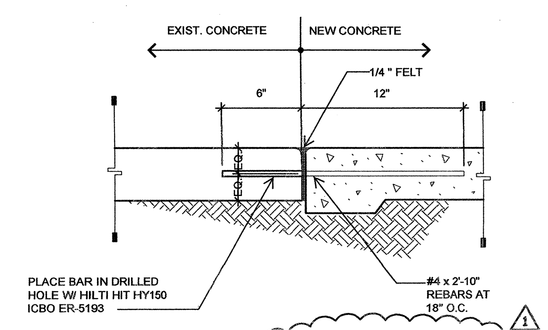

EXPANSION JOINT WITH (E) CONC. PAVING — J14

N.T.S.

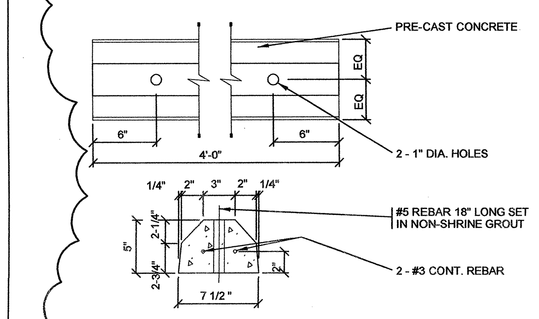

WHEEL STOP — J17

1 1/2"=1'-0"

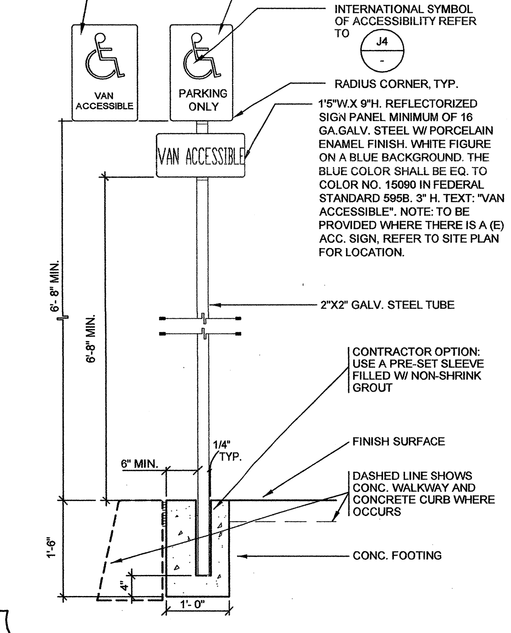

ACCESSIBLE PARKING SIGN — A4

3/4"=1'-0"

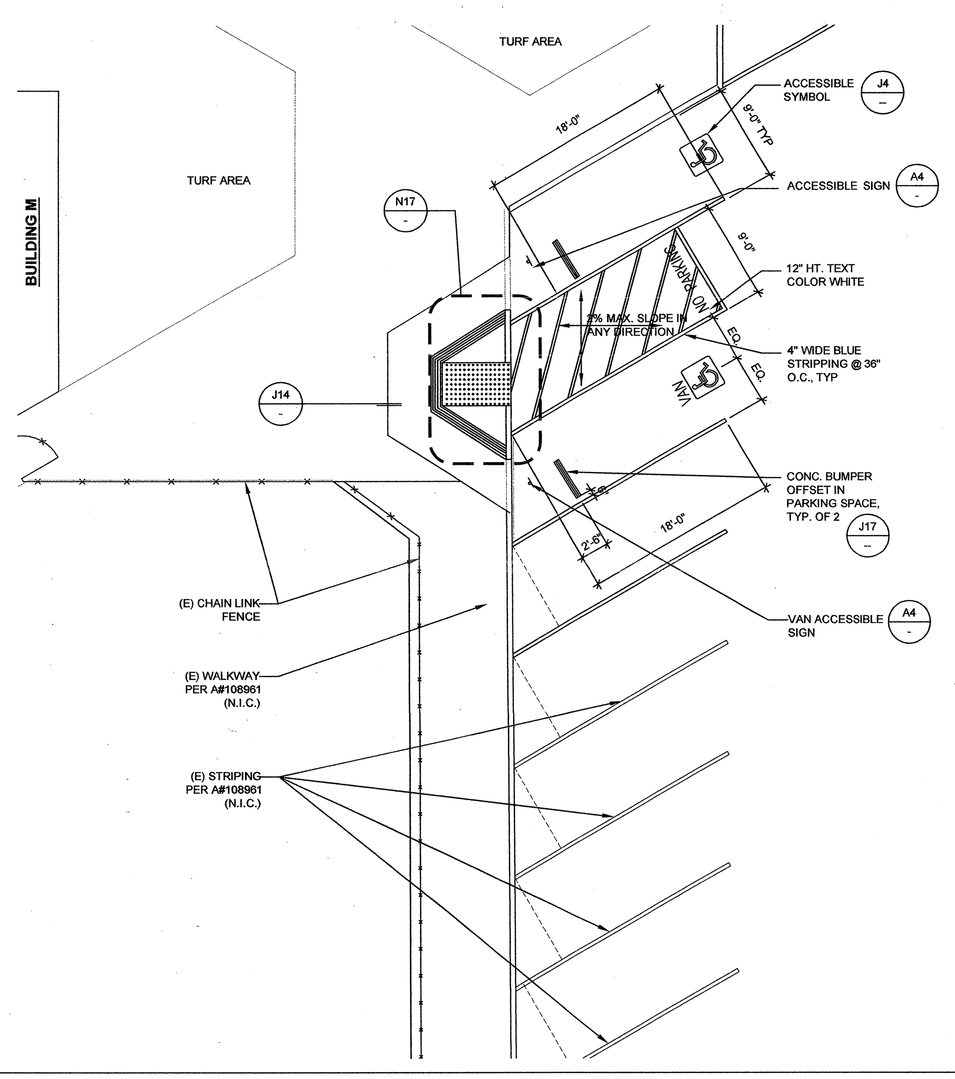

REMODEL PLAN AT CURB RAMP — A10

1/8"=1'-0"

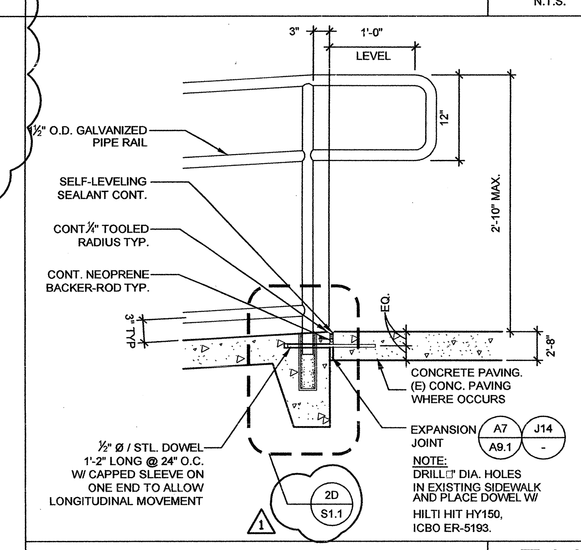

CONCRETE RAMP DETAIL — E14

1"=1'-0"

NOT USED — E17

SCALE

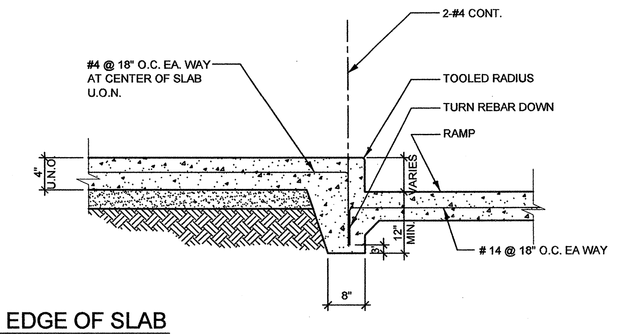

D-TYPICAL EDGE OF SLAB

RAMP DETAIL — A17

N.T.S.

HMC ARCHITECTS
Architecture Interiors Planning
3546 CONCOURS STREET
ONTARIO, CALIFORNIA 91764
Telephone: 909 . 989 . 9979
Fax: 909 . 483 . 1400
www. hmcarchitects .com

DEMOLITION KEYNOTES DETAIL/LEGEND

01	SAWCUT & REMOVE A.C. PAVING SHOWN
02	REMOVE AND CAP SPRINKLER LINE
03	REMOVE CHAIN LINK FENCE AND /OR GATE, SAVE TO SCHOOL DISTRICT
04	SAWCUT & REMOVE CONCRETE WALKWAY SHOWN
05	REMOVE TURF
06	SAWCUT AND REMOVE CONC. CURB
07	REMOVE CONTROL VALVE
08	BLACKEN OFF PARKING STRIPING
09	NOT USED
10	NOT USED
11	NOT USED
12	NOT USED
13	NOT USED

KEY PLAN

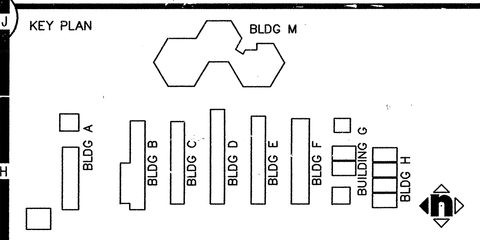

AGENCY APPROVAL

FILE NO. 36-55
IDENTIFICATION STAMP
DIV. OF THE STATE ARCHITECT
OFFICE OF REGULATION SERVICES
APPL. 04-107962
AC. _____ FLS _____ SS _____
DATE _____

CONSTRUCTION DOCUMENTS

SAN BERNARDINO CITY UNIFIED SCHOOL DISTRICT
777 NORTH F STREET
SAN BERNARDINO,CA. 92410

© HMC GROUP 2000

No	Revisions/Submissions	Date
1	DSA ADDENDUM NO. 1	08/18/08
3	ADD NO. 3	2/23/10

Consultant Seal

Consultant

Project Title
BRADLEY ELEMENTARY SCHOOL MODERNIZATION
SAN BERNARDINO, CA

Drawing Title
DETAILS

Architect Seal
LICENSED ARCHITECT CHRISTOPHER BLOMQUIST TAYLOR LICENSE NO. C-19759 REN. 02-24-09 STATE OF CALIFORNIA

Designed	---
Drawn	DL/LJ/EC
Checked	AC
Reviewed	JK
Date	10-27-06
Project No	3137106
Scale	AS NOTED
Drawing No	A9.2
of	

G:\DGN\3137\106\Addendum-1\Sheets\A-9.2.dwg

PLEASE RECYCLE

Aug 12, 2008 - 11:25am

" BID ISSUANCE SET"