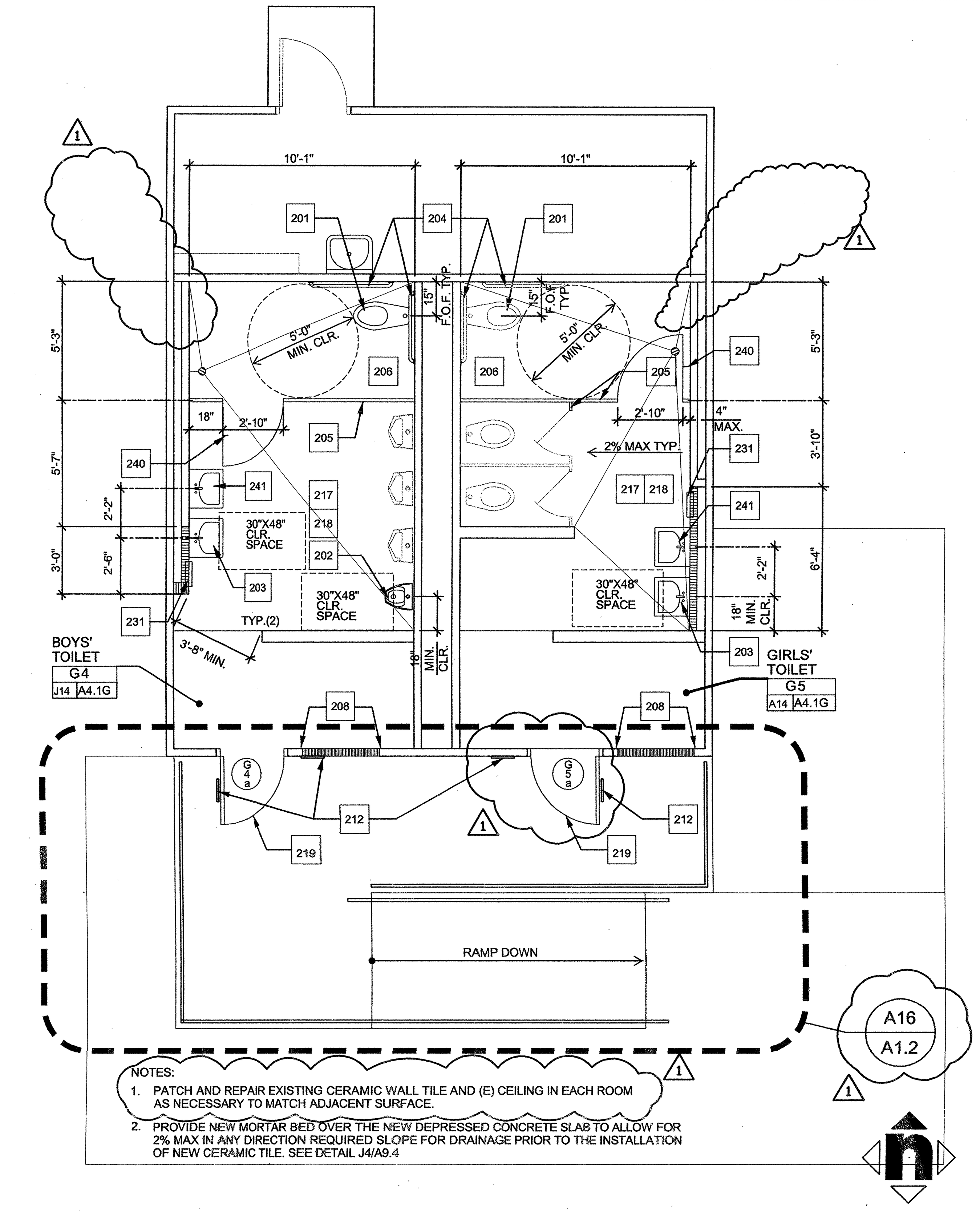

BOY'S TOILET G4 AND GIRL'S TOILET G5 - REMODEL
BUILDING G
J6 — 1/4" = 1'-0"

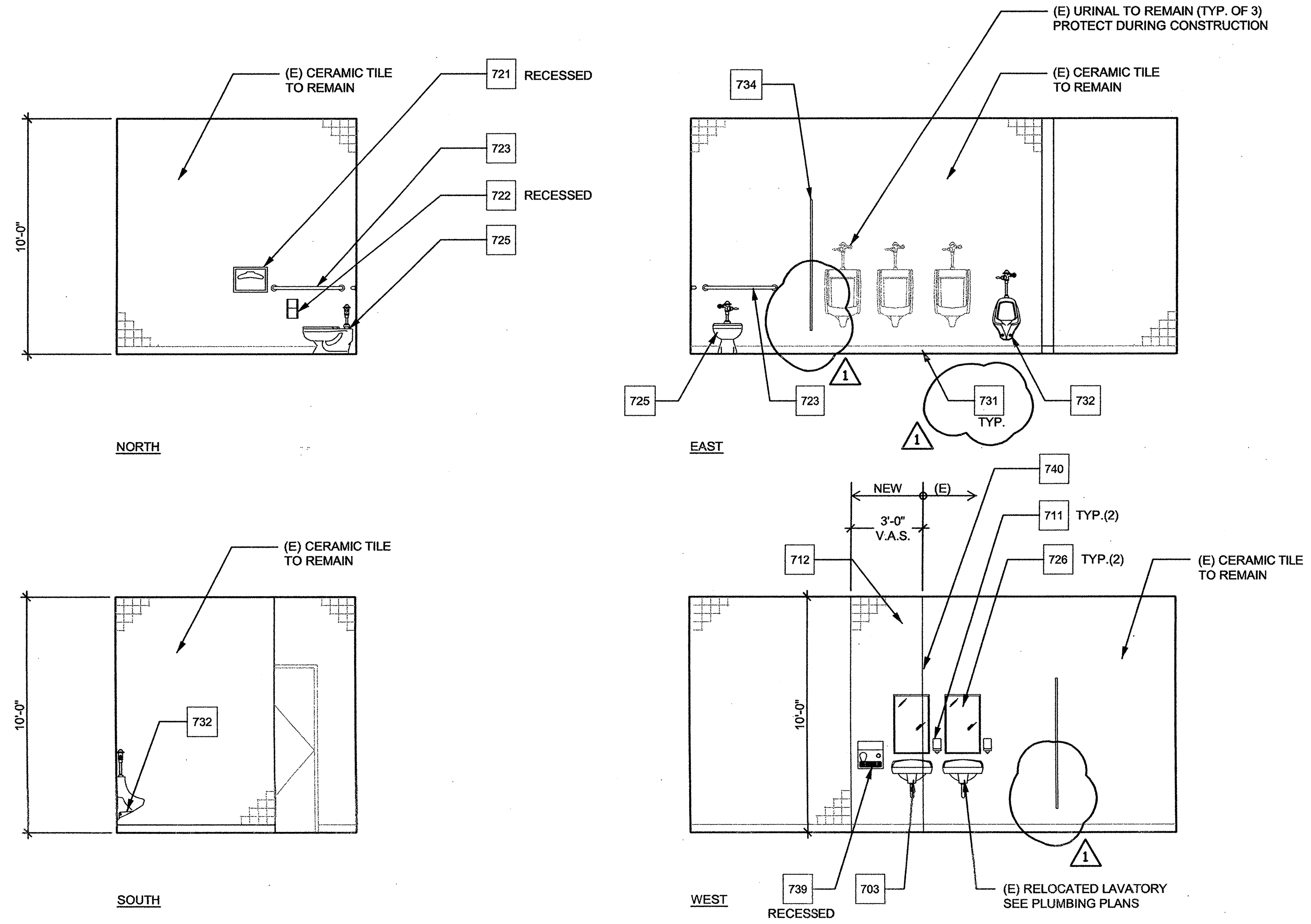

NOTE: REFER TO DET. A17/A9.3 FOR TOILET ACCESSORIES MOUNTING HEIGHTS. USE 'E' MOUNTING HEIGHTS.

BOYS' TOILET G4 - INTERIOR ELEVATIONS
J14 — 1/4" = 1'-0"

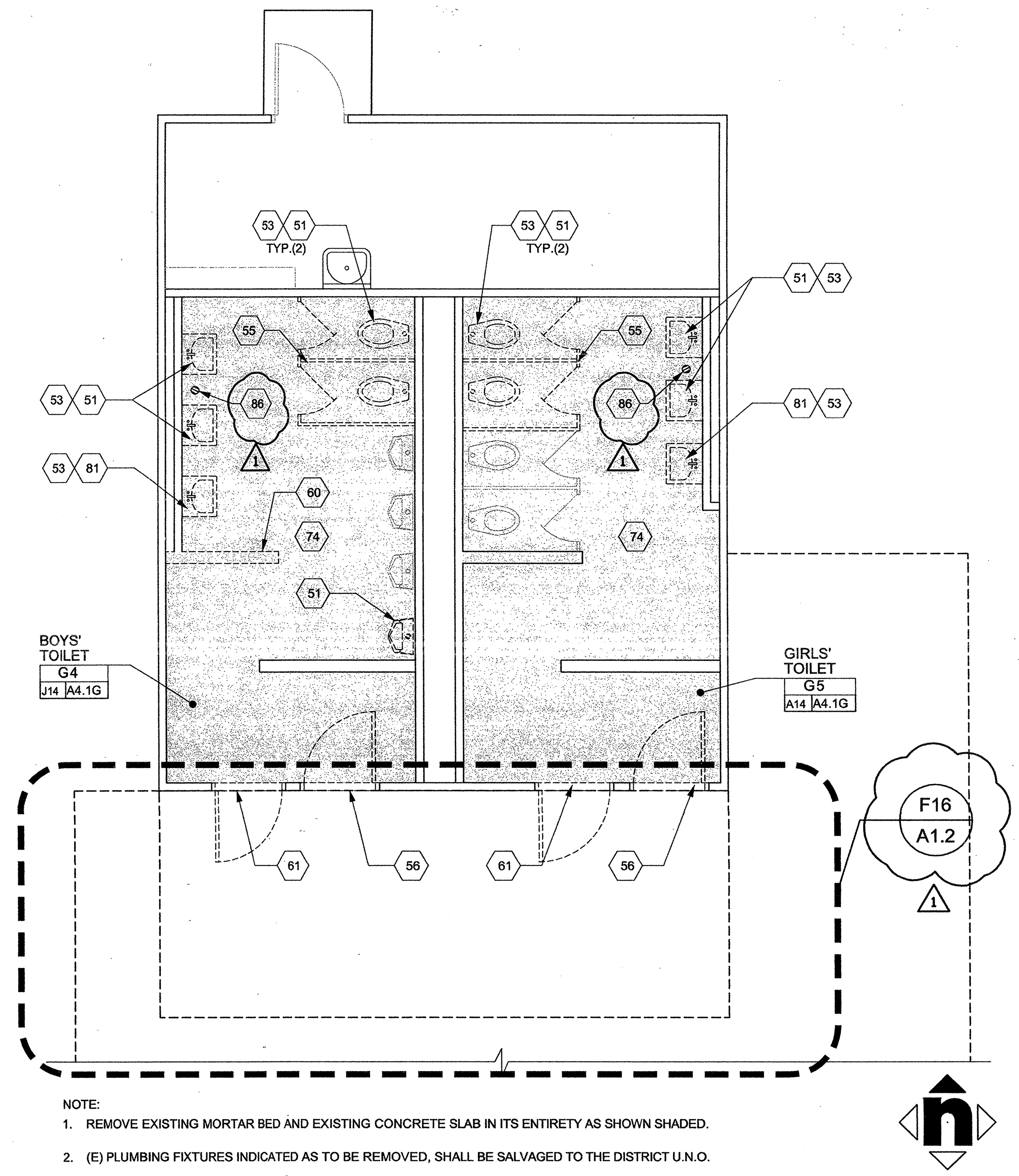

NOTE:
1. REMOVE EXISTING MORTAR BED AND EXISTING CONCRETE SLAB IN ITS ENTIRETY AS SHOWN SHADED.
2. (E) PLUMBING FIXTURES INDICATED AS TO BE REMOVED, SHALL BE SALVAGED TO THE DISTRICT U.N.O.

BOY'S TOILET G4 AND GIRL'S TOILET G5 - DEMOLITION
BUILDING G
A6 — 1/4" = 1'-0"

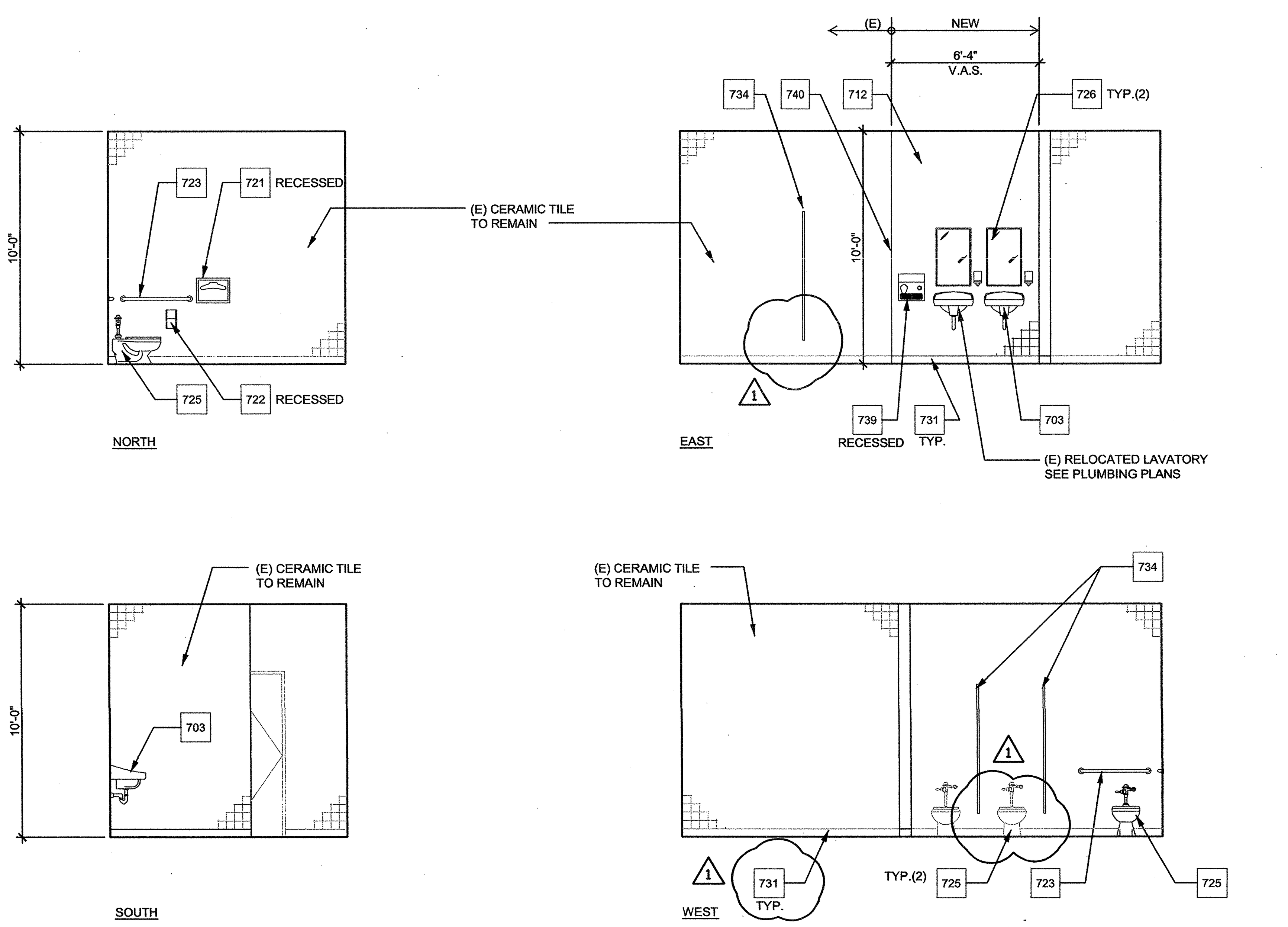

NOTE: REFER TO DET. A17/A9.3 FOR TOILET ACCESSORIES MOUNTING HEIGHTS. USE 'E' MOUNTING HEIGHTS.

GIRLS' TOILET G5 - INTERIOR ELEVATIONS
A14 — 1/4" = 1'-0"

INTERIOR ELEVATION KEYNOTES
701 NOTE: NOT ALL KEYNOTES LISTED APPLY TO THIS SHEET

	DESCRIPTION
701	(E) EXPOSED CONCRETE BEAM
702	(E) EXPOSED BRICK MASONRY
703	LAVATORY, SEE PLUMBING DWGS.
704	FOLDING SHOWER SEAT
705	(E) ELECTRICAL PANEL TO REMAIN
706	(E) ELECTRICAL OUTLET TO REMAIN
707	(E) FIRE ALARM TO REMAIN
708	(E) TOP SET BASE
709	(E) CASEWORK TO REMAIN
710	PAPER TOWEL DISPENSER
711	SOAP DISPENSER
712	CERAMIC TILE WALL
713	TACKABLE WALL SURFACE ALONG FULL LENGTH OF WALL (7'-0" H), SEE DET. A14/A9.4
714	RELOCATED FIRE EXTINGUISHER CABINET MOUNT + 48" A.F.F. TO HANDLE
715	RELOCATED FIRE EXTINGUISHER, SEE DET. E17/A9.4
716	(E) TACKBOARD TO REMAIN
717	MARKERBOARD (16' W x 4' H, U.N.O.), SEE DET. J4/E9.4
718	TOP SET BASE
719	PAINT WALL(S), SEE ROOM FINISH SCHED.
720	WINDOW(S), SEE WINDOW SCHEDULE
721	TOILET SEAT COVER DISPENSER
722	TOILET TISSUE DISPENSER
723	GRAB BAR(S)
724	DOOR, SEE DOOR SCHEDULE
725	TOILET, SEE PLUMBING DWGS.
726	MIRROR (18"WX30"H U.N.O.)
727	TOILET PAPER DISPENSER AND NAPKIN DISPOSAL COMBO
728	PATCH AND REPAIR (E) TERRAZZO
729	CERAMIC TILE
730	(E) DOOR TO REMAIN
731	CERAMIC TILE BASE
732	URINAL, SEE PLUMBING DWGS.
733	URINAL SCREEN, SEE DET. J4/A9.3
734	TOILET PARTITION, SEE DET. J4/A9.3
735	REFURBISH (E) CASEWORK. REPLACE MISSING HARDWARE AS REQUIRED.
736	(E) FIRE EXTINGUISHER TO REMAIN.
737	(N) FIRE EXTINGUISHER CABINET. MOUNT + 48" A.F.F. TO HANDLE.
738	COAT RACK
739	ELECTRIC HAND DRYER
740	PATCH AND REPAIR (E) WALL
741	CASEWORK
742	FIRE EXTINGUISHER, SEE DET. E17/A9.4
743	WASTE RECEPTACLE
744	FEMININE NAPKIN DISPENSER

DEMOLITION KEYNOTES
51 NOTE: NOT ALL KEYNOTES LISTED APPLY TO THIS SHEET

	DESCRIPTION
51	REMOVE (E) PLUMBING FIXTURE.
52	REMOVE (E) CONC. SLAB
53	REMOVE (E) TOILET ACCESSORIES.
54	REMOVE (E) GRAB BAR.
55	REMOVE (E) TOILET PARTITION.
56	REMOVE (E) DOOR, HARDWARE AND FRAME.
57	REMOVE (E) DOOR AND HARDWARE. (E) FRAME TO REMAIN.
58	REMOVE (E) CASEWORK.
59	REMOVE (E) SINK.
60	REMOVE (E) WALL.
61	REMOVE PORTION OF (E) WALL TO RECEIVE NEW DOOR.
62	REMOVE (E) MARKER BOARD/TACK BOARD/ CHALK BOARD
63	REMOVE (E) WINDOWS
64	REMOVE (E) FLOOR DRAIN AND STRAINER
65	REMOVE (E) CARPET & BASE
66	REMOVE (E) VCT & BASE
67	(E) WINDOWS TO REMAIN
68	(E) FLOOR FINISH TO REMAIN
69	(E) FLOOR DRAIN TO REMAIN
70	REMOVE (E) FLOOR DRAIN STRAINER ONLY
71	REMOVE (E) DRINKING FOUNTAIN
72	REMOVE (E) FIRE EXTINGUISHER FOR RE-INSTALLATION
73	REMOVE (E) QUARRY TILE FLOOR & BASE
74	REMOVE (E) CERAMIC TILE FLOOR & BASE
75	SAWCUT (E) SLAB & REMOVE AS REQUIRED. PATCH & REPAIR TO MATCH ADJ. SURFACES. SEE PLUMBING DRAWINGS.
76	REMOVE (E) CERAMIC TILE WALL FINISH
77	REMOVE (E) COAT RACK
78	REMOVE (E) FIRE EXTINGUISHER CABINET
79	REMOVE (E) WALL COVERING
80	REMOVE (E) THRESHOLD
81	(E) LAVATORY TO BE CAREFULLY REMOVED FOR RELOCATION. SEE REMODEL PLAN
82	REMOVE (E) CASEWORK FOR RE-INSTALLATION
83	NOT USED
84	NOT USED
85	REMOVE AND REROUTE (E) ELECT. ITEMS, SEE ELECT.
86	(E) FLOOR DRAIN TO REMAIN.

REMODEL KEYNOTES
201 NOTE: NOT ALL KEYNOTES LISTED APPLY TO THIS SHEET

	DESCRIPTION
201	TOILET, SEE PLUMBING DWGS.
202	URINAL, SEE PLUMBING DWGS.
203	LAVATORY, SEE PLUMBING DWGS.
204	GRAB BAR
205	TOILET PARTITION, SEE DET. J4/A9.3
206	TOILET ACCESSORIES, SEE INTERIOR ELEVATIONS
207	CASEWORK, SEE INTERIOR ELEVATIONS.
208	PATCH, REPAIR AND PAINT (E) WALL, MATCH ADJACENT FINISHES.
209	PAINT (E) WALLS, SEE ROOM FINISH SCHEDULE
210	TOP SET BASE
211	TACKABLE WALL SURFACE ALONG FULL LENGTH OF WALL (7'-0" H), SEE DET. A14/A9.4
212	ACCESSIBLE ROOM IDENTIFICATION & TOILET ROOM DOOR SIGNAGE, SEE DET. N14/A9.3
213	CARPET
214	VINYL COMPOSITION TILE
215	MARKER BOARD (16' W x 4' H, U.N.O.), SEE DET. J4/A9.4
216	SINK, SEE PLUMBING DWGS.
217	CERAMIC TILE FLOOR
218	CERAMIC TILE BASE
219	NEW DOOR, SEE DOOR SCHEDULE
220	PATCH AND REPAIR (E) TERRAZZO FLOORING / WAINSCOT
221	DRINKING FOUNTAIN, SEE DET. A11/A9.3 AND PLUMBING DWGS.
222	CERAMIC TILE WAINSCOT
223	DEMOUNTABLE PARTITION PANEL SEE SPECIFICATIONS
224	REPLACE FLOOR DRAIN COVER - LIMITED TO 1/2" MAX. GRATING IN THE DIRECTION OF TRAFFIC FLOW.
225	REINSTALL (E) FIRE EXTINGUISHER @ 48" A.F.F., SEE DET. E17/A9.4
226	PATCH AND REPAIR (E) CONCRETE SLAB FLUSH TO MATCH (E)
227	URINAL SCREEN, SEE DET. J4/A9.3
228	REFURBISH (E) CASEWORK, REPLACE MISSING HARDWARE AS REQUIRED
229	DIRECTIONAL SIGNAGE, SEE DET. N11/A9.3
230	COAT RACK
231	ELECTRIC HAND DRYER
232	FIRE EXTINGUISHER @ 48" A.F.F, SEE DET. E17/A9.4
233	EXT. DOOR SILL, SEE E4/A9.7 OR N17/A9.7
234	(E) MURAL TO REMAIN
235	PATCH AND REPAIR (E) CERAMIC TILE FLOORING
236	DIRECTIONAL ENTRY/EXIT SIGN, SEE DET. A17/A9.4
237	OCCUPANT LOAD SIGN, SEE A4/A9.4
238	ASSISTIVE LISTENING SIGN, SEE DET E7/A9.4
239	EXIT SIGN, SEE DET. A4/A9.2
240	COAT HOOK (+48" MAX)
241	(E) RELOCATED LAVATORY, SEE PLUMBING DWGS.
242	ROOM IDENTIFICATION SIGN, SEE DET. A7/A9.2
243	NOT USED
244	REINSTALL (E) CASEWORK

HMC ARCHITECTS
Architecture Interiors Planning
3546 CONCOURS STREET
ONTARIO, CALIFORNIA 91764
Telephone: 909 . 989 . 9979
Fax: 909 . 483 . 1400
www. hmcarchitects .com

WALL TYPES

- (E) WALL
- NON-RATED, 2 X6 WOOD STUD WALL (A7/A9.6)
- NON-RATED, METAL STUD WALL (J7/A9.4)
- METAL PANEL INFILL (E7/A9.8)

NOTE: SEE FLOOR PLAN FOR APPLICABLE WALL TYPES.

KEY PLAN

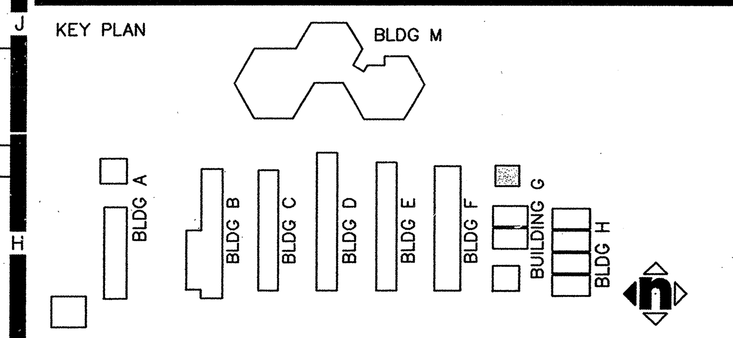

AGENCY APPROVAL

FILE NO. 36-55
IDENTIFICATION STAMP
DIV. OF THE STATE ARCHITECT
OFFICE OF REGULATION SERVICES
APPL. 04-107962
AC_____ FLS_____ SS_____
DATE_____

CONSTRUCTION DOCUMENTS

SAN BERNARDINO CITY UNIFIED SCHOOL DISTRICT
777 NORTH F STREET
SAN BERNARDINO,CA. 92410

© HMC GROUP 2000

No	Revisions/Submissions	Date
1	DSA ADDENDUM NO. 1	08/18/08
2	ADD NO. 3	2/23/10

Consultant Seal

Consultant

Project Title
BRADLEY ELEMENTARY SCHOOL
MODERNIZATION
SAN BERNARDINO, CA

Drawing Title
ENLARGED TOILET
FLOOR PLANS - BUILDING G

Architect Seal
LICENSED ARCHITECT CHRISTOPHER RICHARD TAYLOR No. C-19759 REN. 02-24-09 STATE OF CALIFORNIA

Designed	--	Project No	3137106
Drawn	DL/LJ/EC	Scale	AS NOTED
Checked	AC	Drawing No	
Reviewed	JK		A4.1G
Date	10-27-06		of

G:\DGN\3137\106\Addendum-1\Sheets\A-4.1G.dwg

PLEASE RECYCLE

Aug 12, 2008 - 11:30am

" BID ISSUANCE SET"