# MECHANICAL LEGEND

| SYMBOLS | DESCRIPTION |
|---|---|
| | DUCTWORK |
| | DUCT SECTION - SUPPLY |
| | DUCT SECTION - EXHAUST |
| | DUCT SECTION - RETURN |
| | SMOKE SENSOR |
| | MOTORIZED DAMPER |
| | COMBINATION SMOKE AND FIRE DAMPER |
| | MANUAL VOLUME DAMPER (MVD) |
| | FUSIBLE LINK FIRE DAMPER (FLFD) |
| | CONCEALED DAMPER REGULATOR |
| | EXISTING DUCT TO BE REMOVED |
| C.D. | CONDENSATE DRAIN |
| S.A. | SUPPLY AIR DUCT SINGLE LINE |
| R.A. | RETURN AIR DUCT (SINGLE LINE) |
| E.A. | EXHAUST AIR DUCT (SINGLE LINE) |
| | ELBOWS WITH TURNING VANES |
| D | DUCT DROP |
| R | DUCT RISE |
| | DUCT WITH SOUND INSULATION |
| | BRANCH DUCT WITH EXTRACTOR |
| E | FURNISHED, INSTALLED AND WIRED BY ELECTRICAL |
| ME | FURNISHED AND INSTALLED BY MECHANICAL WIRED BY ELECTRICAL |
| A.P. | ACCESS PANEL |
| C.D. | CEILING DIFFUSER |
| E.A.R. | EXHAUST AIR REGISTER |
| E.A. | EXHAUST AIR |
| NK. | NECK |
| O.A. | OUTSIDE AIR |
| R.A.R. | RETURN AIR REGISTER |
| R.A. | RETURN AIR |
| S.A.R. | SUPPLY AIR REGISTER |
| S.A. | SUPPLY AIR |
| S.I. | SOUND INSULATION |
| T.A.G. | TRANSFER AIR GRILLE |
| T | THERMOSTAT - @48"A.F.F. (46"A.F.F. IF ABOVE CASEWORK OR OTHER OBSTRUCTION) |
| | POINT OF CONNECTION P.O.C. |

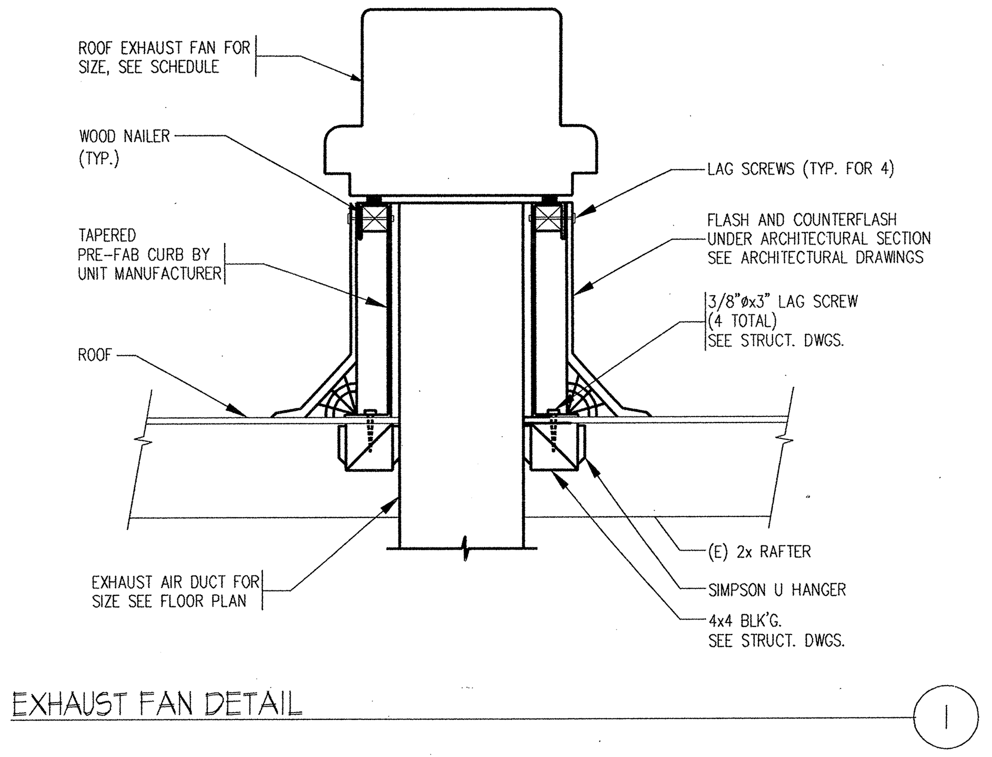


EXHAUST FAN DETAIL (1)

## MECHANICAL SPECIFICATIONS

1. SCOPE
   - A. FURNISH ALL LABOR, EQUIPMENT AND MATERIALS AND PERFORM ALL OPERATIONS IN CONNECTION WITH THE INSTALLATION OF A COMPLETE VENTILATION SYSTEM, IN ACCORDANCE WITH THE BEST STANDARD PRACTICES OF THE TRADES, STATE BUILDING CODES AND OTHER LEGALLY CONSTITUTED AUTHORITIES HAVING JURISDICTION.
2. SUBMITTALS
   - A. SUBMITTALS ARE REQUIRED ON EVERY ITEM TO BE FURNISHED WHETHER OR NOT IT IS THE SPECIFIED ITEM.
   - B. SIX (6) BOUND COPIES OF EACH OF SHOP DRAWINGS, INDICATING PROPOSED LAYOUT, MATERIAL LISTS AND/OR PLATES OR BROCHURES OF MATERIALS AND EQUIPMENT SPECIFIED HEREIN SHALL BE PREPARED AND SUBMITTED TO THE ENGINEER FOR REVIEW WITHIN 15 DAYS AFTER AWARD OF CONTRACT. NO WORK INDICATED ON ANY ONE SHOP DRAWING SHALL BE STARTED UNTIL SUCH DRAWINGS HAVE BEEN REVIEWED AND APPROVED BY THE ENGINEER.
3. RECORD DRAWINGS: TWO (2) COMPLETE SETS OF "AS-BUILT" DRAWINGS SHALL BE RETURNED TO THE OWNER
4. GUARANTEE: ALL MATERIALS AND APPARATUS AND WORKMANSHIP INSTALLED UNDER THIS SECTION TO BE UNCONDITIONALLY GUARANTEED BY CONTRACTOR FOR A PERIOD OF ONE (1) YEAR AGAINST FAILURE DUE TO FAULTY MATERIALS OR WORKMANSHIP. CONTRACTOR TO CORRECT SAID FAILURE AT NO COST TO THE OWNER.
5. DUCT, PLENUMS AND ACCESS DOORS SHALL BE INSTALLED AND SUPPORTED AS INDICATED OR REQUIRED. DUCT SHALL BE MADE UP OF SHEETS OF PRIME GALVANIZED STEEL OF GAUGE AND SUPPORTED IN ACCORDANCE WITH THE REQUIREMENTS OF LATEST EDITION OF ASHRAE GUIDE, UNIFORM MECHANICAL CODE AND LEGALLY CONSTITUTED AUTHORITIES HAVING JURISDICTION. FOR SEISMIC SUPPORT, REFER TO SMACNA GUIDELINES FOR SEISMIC RESTRAINT OF MECHANICAL SYSTEMS.
6. EQUIPMENT SHALL BE AS INDICATED ON THE DRAWINGS. ALL MATERIALS, EQUIPMENT AND APPARATUS SHALL BE INSTALLED AS RECOMMENDED BY THE MANUFACTURER.
7. AIR DISTRIBUTION EQUIPMENT
   - A. AIR DISTRIBUTION EQUIPMENT SHALL BE FURNISHED IN BAKED OFF-WHITE ENAMEL FINISH.
   - B. SQUARE SUPPLY AIR CEILING DIFFUSERS: ANEMOSTAT RMD-5 WITH VOLUME CONTROL (SURFACE MOUNT). ANEMOSTAT TYPE RMD-FP W/ VOL. CONTROL (T-BAR CEILING).
   - C. RETURN AND EXHAUST AIR CEILING REGISTERS: ANEMOSTAT TYPE S3HOD WITH VOLUME CONTROL AND LAY-IN PANEL TO T-BAR CEILING.
   - D. EXTRACTOR AT CEILING DIFFUSERS: DEFLECTROLS.
   - E. ALL AIR DISTRIBUTION EQUIPMENT LOCATIONS SHALL BE COORDINATED WITH LIGHTING FIXTURES AND CEILING CONSTRUCTION.
8. DUCT JOINT TAPING SHALL BE PROVIDED WITH 6" WIDE, 6 OZ. CANVAS SATURATED WITH ARABOL.
9. DAMPERS: BALANCING DAMPERS SHALL BE INSTALLED IN EACH BRANCH DUCT AND IN EACH MAIN DUCTS TO PROVIDE FOR COMPLETE AIR BALANCING.
10. PER UBC 1997 W/ CALIFORNIA AMENDMENTS, CHAPTER 16A, TABLE 16A-O. ALL MECHANICAL EQUIPMENT SHALL BE BRACED OR ANCHORED AGAINST SEISMIC FORCES TO RESIST A HORIZONTAL FORCE ACTING IN ANY DIRECTION. (SPECIFIED IN 1632A)
11. ANCHORAGE OF PIPING, DUCTWORK AND EQUIPMENT SHALL BE IN ACCORDANCE WITH THE "GUIDELINES FOR SEISMIC RESTRAINT OF MECHANICAL SYSTEMS AND PLUMBING PIPING SYSTEMS SEISMIC HAZARD LEVEL AA" PUBLISHED BY SMACNA; OSHPD APPROVED ANCHORAGE #R-0010 OR AN EQUIVALENT OSHPD APPROVED SYSTEM.
12. COMBINATION SMOKE-FIRE DAMPERS: MANUFACTURED IN ACCORDANCE WITH THE STATE FIRE MARSHAL APPROVED WITH PERMANENT IDENTIFICATION PROVIDED IN ACCORDANCE WITH ORDINANCES JURISDICTION. SUITABLE ACCESS FOR SERVICING DAMPERS SHALL BE PROVIDED.
13. VERIFICATION OF DIMENSIONS:
   - A. ALL INDICATED DIMENSIONS ARE APPROXIMATE AND ARE GIVEN FOR ESTIMATE PURPOSE ONLY. BEFORE PROCEEDING WITH THE WORK THIS CONTRACTOR SHALL CAREFULLY CHECK AND VERIFY ALL DIMENSIONS, SIZES, REQUIRED CLEARANCES AND SHALL ASSUME FULL RESPONSIBILITY FOR ALL EQUIPMENT AND MATERIALS HEREIN REQUIRED TO OTHER PARTS OF THE WORK AND TO THE WORK OF OTHER TRADES.
   - B. THE DRAWINGS ARE ESSENTIALLY DIAGRAMMATIC TO THE EXTENT THAT ALL OFFSETS, BENDS, SPECIAL FITTINGS AND LOCATION ARE NOT EXACTLY LOCATED.
   - C. THIS CONTRACTOR SHALL COMPLY WITH ALL CONTRACT DOCUMENTS IN LAYING OUT HIS WORK AND EQUIPMENT. HE SHALL COORDINATE THE WORK OF THIS SECTION WITH THE WORK OF OTHER SECTIONS AND ALL JOB CONDITIONS.
   - D. THE INSTALLATION OF DAMPERS, DUCT ACCESS DOORS OR OTHER INDICATING EQUIPMENT OR SPECIALTIES REQUIRING READING, ADJUSTMENT, INSPECTION, REPAIR, REMOVAL OR REPLACEMENTS SHALL BE CONVENIENTLY AND ACCESSIBLY LOCATED WITH REFERENCE TO THE FINISHED BUILDING.

## PLUMBING FIXTURE SCHEDULE

| FIXTURE | SPEC. NO. | DRAIN SIZE | TRAP | VENT | CW SIZE | HW SIZE | REMARKS |
|---|---|---|---|---|---|---|---|
| WATER CLOSET | WC-1 | 4" | INT. | 2" | 1-1/4" | - | AMERICAN-STANDARD "MADERA" #3451.128 FLOOR MOUNTED. SLOAN ROYAL #111-1.28 FLUSH VALVE, OLSONITE-14½" OPEN FRONT SEAT #10CC AMFR. ACCESSIBLE HEIGHT. |
| WATER CLOSET | WC-2 | 4" | INT. | 2" | 1-1/4" | - | AMERICAN-STANDARD "MADERA" #3461.128 FLOOR MOUNTED. SLOAN ROYAL #111-1.28 FLUSH VALVE, OLSONITE-17" OPEN FRONT SEAT #10CC AMFR. ACCESSIBLE HEIGHT. |
| LAVATORY | L-1 | 2" | 1-1/2" | 1-1/2" | 1/2" | - | "CECO" MODEL NO. 551, SIZE 20"X18" WALL HUNG LAVATORY WITH 3 HOLES (4" ON CENTER) FURNISHED WITH SMITH FIG. 723 CARRIER, CHICAGO FAUCET # 3400 CP SUPPLY FITTING, CHICAGO # 327 GRID DRAIN, 1-¼"X1-½" 17 GA. CP. "P" TRAP SUPPLY, STOP AND WALL FLANGES. |
| LAVATORY | L-2 | 2" | 1-1/2" | 1-1/2" | 1/2" | - | "CECO" MODEL NO. 551, SIZE 20X18 WALL HUNG LAVATORY WITH 3 HOLES (4" ON CENTER) FURNISHED WITH SMITH FIG. 723 CARRIER, CHICAGO FAUCET # 3400 CP SUPPLY FITTING, CHICAGO # 337 GRID DRAIN, 1-¼"X1-½" 17 GA. CP. "P" TRAP SUPPLY, STOP AND WALL FLANGES. ACCESSIBLE HEIGHT. |
| LAVATORY | L-3 | 2" | 1-1/2" | 1-1/2" | 1/2" | 1/2" | "CECO" MODEL NO. 551, SIZE 20X18 WALL HUNG LAVATORY WITH 3 HOLES (4" ON CENTER) FURNISHED WITH SMITH FIG. 723 CARRIER, CHICAGO FAUCET # 895-317 CP SUPPLY FITTING, CHICAGO # 337 GRID DRAIN, 1-¼"X1-½" 17 GA. CP. "P" TRAP SUPPLY, STOP AND WALL FLANGES. INSULATE HW SUPPLY, TRAP AND TAILPIECE. ACCESSIBLE HEIGHT. |
| URINAL | U-2 | 2" | INT. | 1-1/2" | 3/4" | - | AMERICAN STANDARD "ALLBROOK" 6541.132 1GPF VITREOUS CHINA WALL HUNG, ¾" SPUD, FITTED WITH "SLOAN ROYAL" #186-1 FLUSH VALVE WITH VACUUM BREAKER. ACCESSIBLE HEIGHT. |
| DRINKING FOUNTAIN | DF-1 | 2" | 1-1/4"x 1-1/2" | 1-1/2" | 1/2" | - | HAWS 1501 DUAL HEIGHT, WALL MOUNTED ENAMELED IRON DRINKING FOUNTAIN COMPLETE WITH TWO ONE PIECE FOUNTAINS WITH ROUNDED BOWLS, PUSH BUTTON VALVES, POLISHED C.P. BRASS BUBBLER HEADS AND WASTE STRAINERS, MATCHING MODEL 6715 ENAMELED IRON BACK MOUNTING PLATE, VANDAL-RESISTANT BOTTOM PLATES, 1¼" LOW PROFILE NPT TRAPS, MODEL 6603 ACCESS PANEL, AND MODEL NO. 6800 SUPPORT BARRIER. |
| FLOOR DRAIN | FD-1 | 2" | 2" | 1-1/2" | 1/2" | - | J.R. SMITH FIG. 2005YAP050. PROVIDE TRAP PRIMER IN WALL BEHIND ACCESS PANEL & RUN 1/2" COLD WATER TO DRAIN TP CONNECTION. |

## GENERAL NOTES:

1. ALL WORK SHALL BE IN STRICT ACCORDANCE WITH 2001 TITLE 24 C.C.R. AND ALL LOCAL CODES AND AUTHORITIES HAVING JURISDICTION.
2. BEFORE STARTING ANY WORK, VERIFY THE ADEQUACY, LOCATION, SIZE, AND AVAILABILITY OF ALL UTILITIES CONCERNED.
3. THE WORK OF THIS PROJECT INVOLVES ADDITION TO AND ALTERATIONS OF THE EXISTING BUILDING TO ACHIEVE THE ARRANGEMENT INDICATED ON THE DRAWINGS. VISIT THE JOBSITE TO DETERMINE THE EXTENT OF WORK REQUIRED BY THE CONSTRUCTION ACTIVITIES. THE ARCHITECTURAL DRAWINGS FOR THESE AREAS SHOW THE CHANGES TO BE MADE. REVISE, REARRANGE, REROUTE OR REMOVE EXISTING PIPING AND RELATED APPURTENANCES AS REQUIRED TO ACCOMMODATE THE CHANGES AND ADDITIONS SHOWN TO PROVIDE CONTINUING SERVICE FOR THOSE EXISTING PORTIONS OF THE PROJECT WHICH ARE TO REMAIN IN OPERATION.
4. A. VERIFICATION OF CONDITIONS:
   THE CONTRACTOR SHALL MAKE A DETAILED SURVEY OF THE EXISTING CONDITIONS PERTAINING TO THE WORK UNDER HIS SCOPE PRIOR TO COMMENCING HIS OPERATIONS. ALL DISCREPANCIES OR CONFLICTS BETWEEN THE DRAWINGS AND ACTUAL CONDITIONS SHALL BE IMMEDIATELY REPORTED TO THE ARCHITECT IN WRITING FOR CLARIFICATION OR INSTRUCTIONS AND NO WORK SHALL BE DONE WHERE SUCH CONFLICTS OR DISCREPANCIES OCCUR PRIOR TO RECEIPT OF ARCHITECTS INSTRUCTIONS.

   B. EXTENT:
   DEMOLITION AND REMOVAL OF WORK SHALL BE PERFORMED TO THE EXTENT INDICATED, PLUS ANY ADDITIONAL DEMOLITION AND REMOVAL AS IS NECESSARY FOR THE INSTALLATION OF THE NEW WORK AND REMODELING OF EXISTING WORK, REGARDLESS OF THE WORK SHOWN ON THE DRAWINGS. AT HIS OPTIONS THE CONTRACTOR MAY DEMOLISH OR REMOVE MORE OF LESS EXISTING WORK OF THAT INDICATED. PROVIDED THAT SUCH VARIATION WILL EXPEDITE THE WORK AND REDUCE THE COST TO THE OWNER. THIS OPTION SHALL BE SUBJECT TO THE ARCHITECTS APPROVAL.
5. REMOVE ALL EXISTING PIPING EXPOSED THAT IS NOT TO REMAIN IN USE. CAP OR PLUG SAID PIPING BELOW FLOOR, ABOVE CEILING OR IN WALL. PATCH AND REPAIR WALLS, CEILING OR FLOOR AS NECESSARY WITHIN AREA OF CONSTRUCTION.
6. THIS CONTRACTOR SHALL COORDINATE WITH ALL OTHER TRADES FOR CLEARANCES AND WORK INCLUDED PRIOR TO START OR WORK.
7. SEE ARCHITECTURAL DRAWINGS FOR EXACT PLUMBING FIXTURE LOCATIONS.
8. CLEANOUTS SHALL BE INSTALLED PER LATEST CPC CODE SECTION 707.0 AND SECTION 719.0.
9. PENETRATIONS OR RATED ASSEMBLIES SHALL BE FIRE STOPPED. FIRE STOPPING SHALL BE AN APPROVED MATERIAL AS PRESCRIBED IN CBC STD. 7-5 AND SHALL BE U.L. LISTED.
10. ALL FIXTURES SHALL BE PROTECTED DURING CONSTRUCTION FROM ANY DAMAGE. REFINISHED FIXTURES WILL NOT BE ACCEPTABLE UNDER ANY CONDITIONS.
11. ALL PIPING SHALL BE SUPPORTED IN ACCORDANCE WITH "GUIDLINES FOR RESTRAINTS OF MECHANICAL SYSTEMS, PLUMBING PIPING SYSTEMS" PUBLISHED BY SMACNA.

UNLESS SPECIFICALLY SHOWN ON THESE PLANS NO STRUCTURAL MEMBER SHALL BE CUT, NEITHER DRILLED NOR NOTCHED WITHOUT PRIOR WRITTEN AUTHORIZATION FROM THE STRUCTURAL ENGINEER AND THE DIVISION OF THE STATE ARCHITECT.

THE SEISMIC ANCHORAGE OF MECHANICAL AND ELECTRICAL EQUIPMENT SHALL CONFORM TO C.C.R. TITLE 24, 2001 CBC CHAPTER 16 AND TABLE 16A-O.

## PLUMBING SYMBOLS and ABBREVIATIONS

| SYMBOLS | DESCRIPTION |
|---|---|
| | SOIL OR WASTE ABOVE FLOOR |
| | SOIL OR WASTE BELOW FLOOR |
| SD | STORM DRAIN |
| X | EXISTING SANITARY SEWER |
| | SANITARY VENT V. |
| | COLD WATER C.W. |
| | HOT WATER H.W. |
| | SHUT-OFF VALVE |
| | PRESSURE REDUCING VALVE P.R.V. |
| | OUTSIDE SCREW & YOKE O.S.Y. |
| | CHECK VALVE CH. V. |
| | WALL CLEANOUT W.C.O. |
| | FLOOR CLEANOUT F.C.O. |
| | HOSE BIBB |
| | PLUGGED TEE |
| | WATER HAMMER ARRESTOR W.H.A. |
| | GAS COCK G.C. |
| F | FIRE SPRINKLER LINE |
| | PLUGGED WYE |
| | POST INDICATOR VALVE P.I.V. |
| | RISE |
| | DROP |
| | FLOOR DRAIN F.D. |
| F.U. | FIXTURE UNIT |
| I.E. | INVERT ELEVATION |
| R.I.& C. | ROUGH-IN & CONNECT |
| A.P. | ACCESS PANEL |
| ABV. | ABOVE |
| A.F.F. | ABOVE FINISH FLOOR |
| BEL. | BELOW |
| C.I. | CAST IRON |
| CLG. | CEILING |
| CONT. | CONTINUATION |
| EXIST. | EXISTING |
| BEH. | BEHIND |
| FLR. | FLOOR |
| FIN. FLR. | FINISHED FLOOR |
| FIN. GR. | FINISHED GRADE |
| HDR. | HEADER |
| N.I.C. | NOT IN CONTRACT |
| P.O.C. | POINT OF CONNECTION |
| S. | SOIL OR SEWER |
| V.T.R. | VENT THRU ROOF |
| W. | WASTE |
| G.P.M. | GALLONS PER MINUTE |
| H.B.R. | HOSE BIBB RECESSED |
| R.P.B.P. | REDUCED PRESSURE BACKFLOW PREVENTER |
| FR. | FROM |
| T.P. | TRAP PRIMER |
| V.C.P. | VITRIFIED CLAY PIPE |
| A.T.P.V. | AUTOMATIC TRAP PRIMER VALVE |
| | THRUST BLOCK |
| MTD. | MOUNTED |
| F.V. | FLUSH VALVE |
| U.T.R. | UP THRU ROOF |
| (E) | EXISTING |

## PLUMBING NOTES:

1. CONTRACTOR SHALL INSTALL A BALL VALVE TO ISOLATE WATER SUPPLY AT EACH REMODELED RESTROOM OR ROOM.
2. CONTRACTOR SHALL COORDINATE & VERIFY LAVATORY OR SINK COUNTER CUT-OUT DIMENSIONS W/ CABINET CONTRACTOR FOR THE SPECIFIED PLUMBING FIXTURES PRIOR TO THE SUBMITTAL.
3. CONTRACTOR SHALL VERIFY LOCATION AND EXISTENCE OF HOT & COLD WATER PIPING FOR EACH LAVATORY OR SINK AND SHALL SUBMIT ACCORDINGLY THE APPROPRIATE FIXTURE AS REQUIRED.
4. CONTRACTOR SHALL REMOVE & REINSTALL FIXTURES WHERE (E) ROOM FINISHES ARE BEING REMOVED AND REMODELED.


HMC
Architecture • Interiors • Planning
HMC GROUP
3270 INLAND EMPIRE BLVD
ONTARIO, CALIFORNIA 91764
Telephone: 909 . 989 . 9979
Fax: 909 . 483 . 1400


KEY PLAN

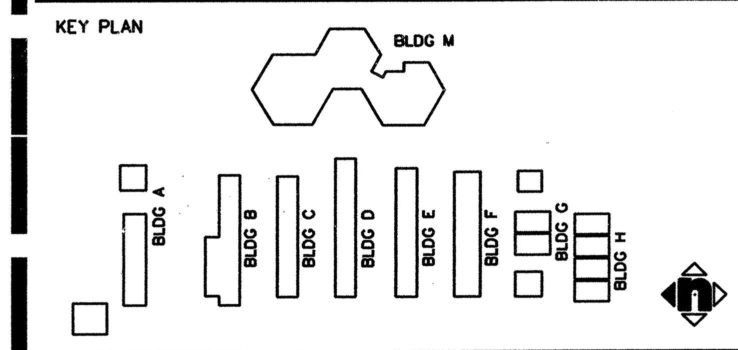


AGENCY APPROVAL

FILE NO. -
IDENTIFICATION STAMP
DIV. OF THE STATE ARCHITECT
OFFICE OF REGULATION SERVICES
APPL.
AC ______ FLS ______ SS ______
DATE ______

SAN BERNARDINO CITY UNIFIED SCHOOL DISTRICT
777 NORTH F STREET
SAN BERNARDINO, CA. 92410

©HMC GROUP 2000

| No | Revisions/Submissions | Date |
|---|---|---|
| 1 | ADDENDUM 1 | 07/31/2008 |
| 3 | ADD. NO. 3 | 2/23/10 |

Consultant Seal: LICENSED ENGINEER MARIO Z. DEL ROSARIO No. M-21988 REN. 12/31/07 MECHANICAL STATE OF CALIFORNIA

Consultant: ACEA, INC. CONSULTING MECHANICAL ENGINEERS

Project Title: BRADLEY ELEMENTARY SCHOOL MODERNIZATION SAN BERNARDINO, CA

Drawing Title: MECH. & PLUMBING SYMBOLS & FIXTURE SCHEDULE

Architect Seal: LICENSED ARCHITECT JOEY A. KRAGELUND NO. C-27989 REN. 6-30-07 STATE OF CALIFORNIA

| | | | |
|---|---|---|---|
| Designed | MZR | Project No | 3137106 |
| Drawn | AEQ | Scale | AS NOTED |
| Checked | JVJ | Drawing No | MP1.0 |
| Reviewed | MZR | | |
| Date | | | of |

" BID ISSUANCE SET"