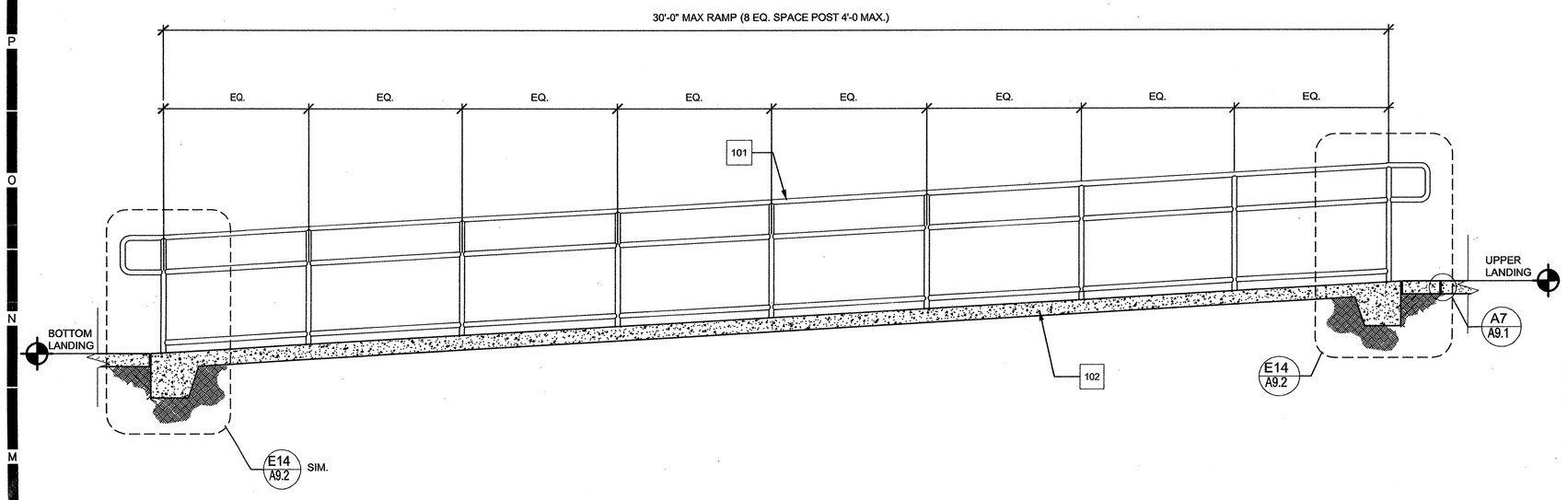

SECTION @ RAMP | L11 | 1/2"=1'-0"

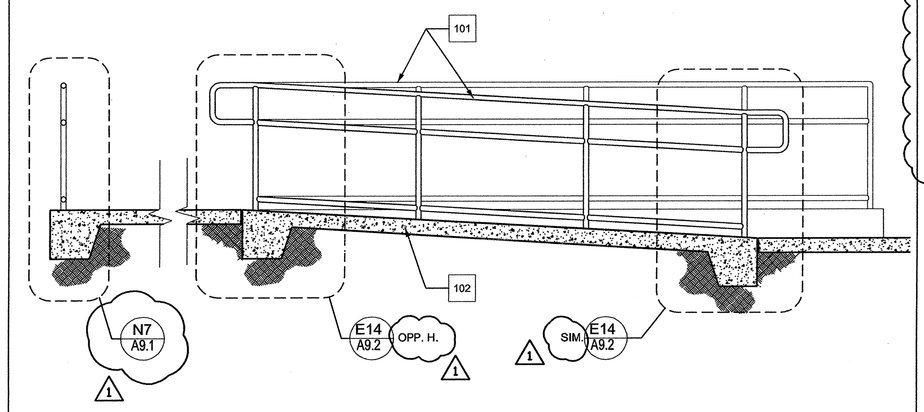

SECTION @ RAMP | L16 | 1/2"=1'-0"

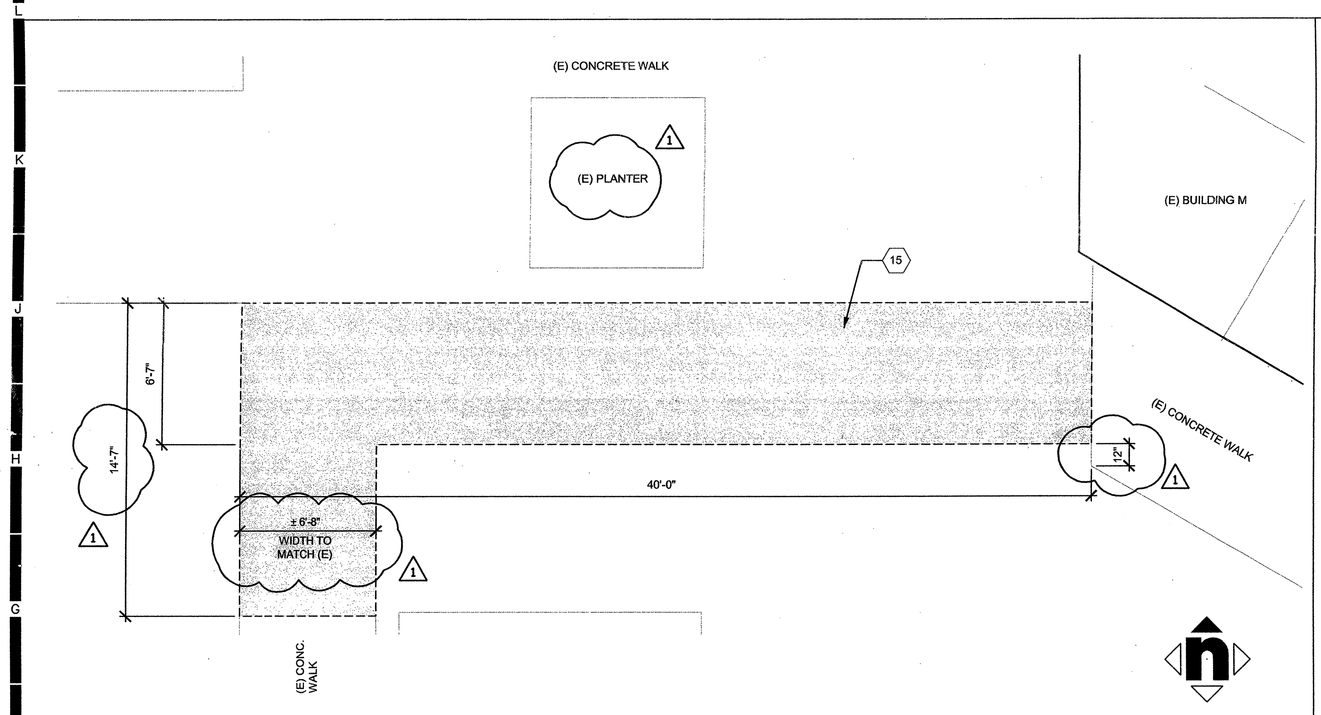

DEMOLITION PLAN @ RAMP | F8 | 1/4"=1'-0"

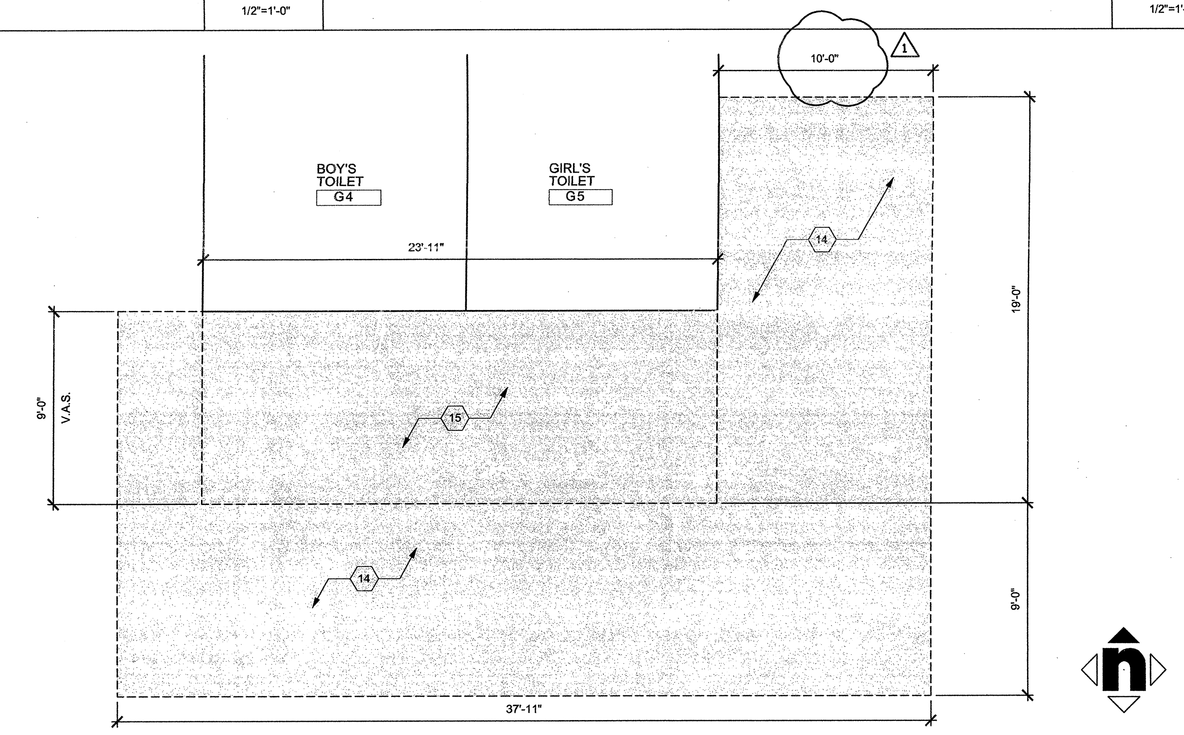

DEMOLITION PLAN @ RAMP | F16 | 1/4"=1'-0"

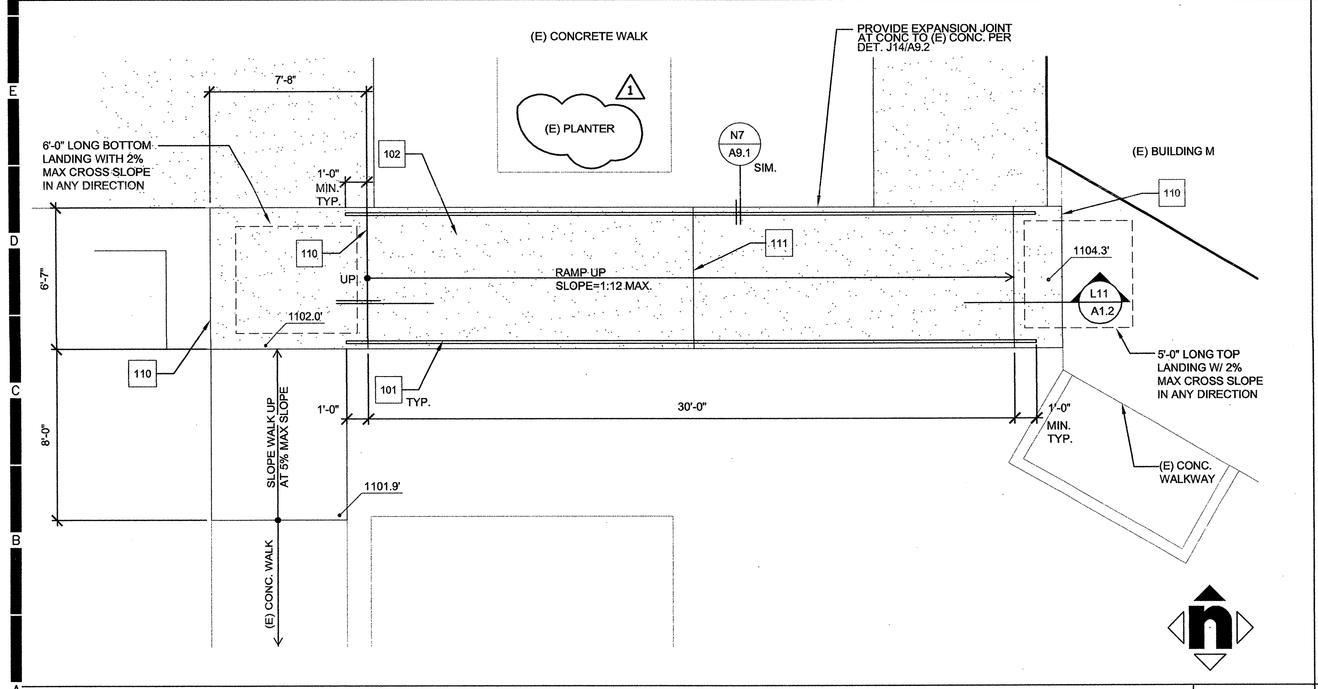

REMODEL PLAN @ RAMP | A8 | 1/4"=1'-0"

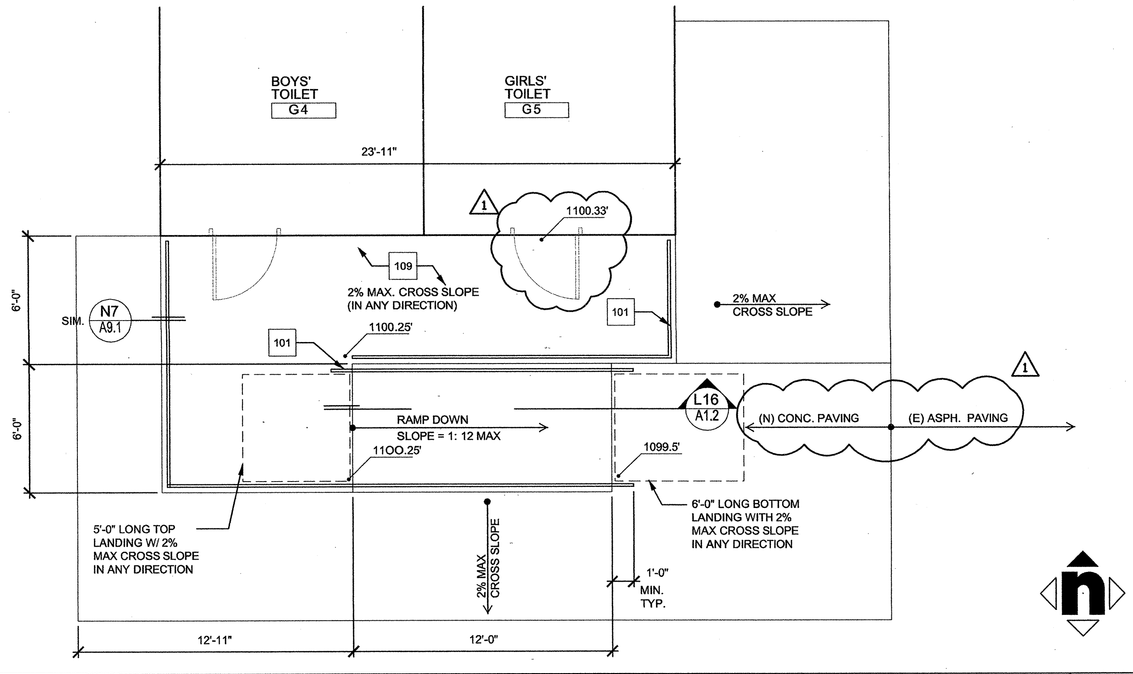

REMODEL PLAN @ RAMP | A16 | 1/4"=1'-0"

DEMOLITION KEYNOTES

1 NOTE: NOT ALL KEYNOTES LISTED APPLY TO THIS SHEET

	DESCRIPTION
1	NOT USED
2	NOT USED
3	NOT USED
4	NOT USED
5	NOT USED
6	NOT USED
7	NOT USED
8	NOT USED
9	NOT USED
10	NOT USED
11	NOT USED
12	NOT USED
13	NOT USED
14	REMOVE PORTION OF (E) ASPHALT PAVING
15	REMOVE (E) CONCRETE WALK

REMODEL KEYNOTES

100 NOTE: NOT ALL KEYNOTES LISTED APPLY TO THIS SHEET

	DESCRIPTION
101	HANDRAIL, SEE DET. N7/A9.1
102	CONCRETE RAMP - SEE 2/S1.1
103	NOT USED
104	NOY USED
105	NOT USED
106	NOT USED
107	NOT USED
108	NOT USED
109	CONCRETE WALK
110	EXPANSION JOINT, SEE DET. A7/A9.1
111	CONTROL JOINT, SEE DET. A4/A9.1
112	NOT USED
113	NOT USED
114	NOT USED
115	NOT USED
116	NOT USED
117	NOT USED

HMC ARCHITECTS
Architecture Interiors Planning
3546 CONCOURS STREET
ONTARIO, CALIFORNIA 91764
Telephone: 909 . 989 . 9979
Fax: 909 . 483 . 1400
www. hmcarchitects .com

KEY PLAN

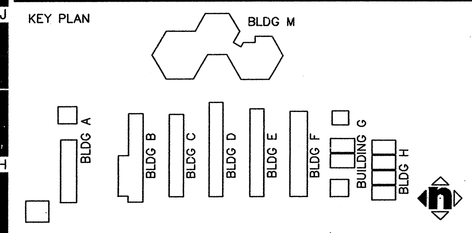

AGENCY APPROVAL

FILE NO. 36-55
IDENTIFICATION STAMP
DIV. OF THE STATE ARCHITECT
OFFICE OF REGULATION SERVICES
APPL. 04-107962
AC_____ FLS _____ SS _____
DATE _____

CONSTRUCTION DOCUMENTS

SAN BERNARDINO CITY UNIFIED SCHOOL DISTRICT
SAN BERNARDINO CITY
UNIFIED SCHOOL DISTRICT
777 NORTH F STREET
SAN BERNARDINO, CA. 92410

© HMC GROUP 2000

No	Revisions/Submissions	Date
1	DSA ADDENDUM NO. 1	08/18/08
3	Adp. No. 3	2/23/10

Consultant Seal

Consultant

Project Title
BRADLEY ELEMENTARY SCHOOL
MODERNIZATION
SAN BERNARDINO, CA

Drawing Title
SITE DETAILS

Architect Seal
LICENSED ARCHITECT
CHRISTOPHER RICHARD JOHNSON
LICENSE NO. C-19759
REN. 02-24-09
STATE OF CALIFORNIA

Designed --	Project No 3137106
Drawn DL/LJ/EC	Scale AS NOTED
Checked AC	Drawing No
Reviewed JK	A1.2
Date 10-27-06	of

G:\DGN\3137\106\Addendum-1\Sheets\A-1.2.dwg

PLEASE RECYCLE

Aug 13, 2008 - 9:20am

" BID ISSUANCE SET"