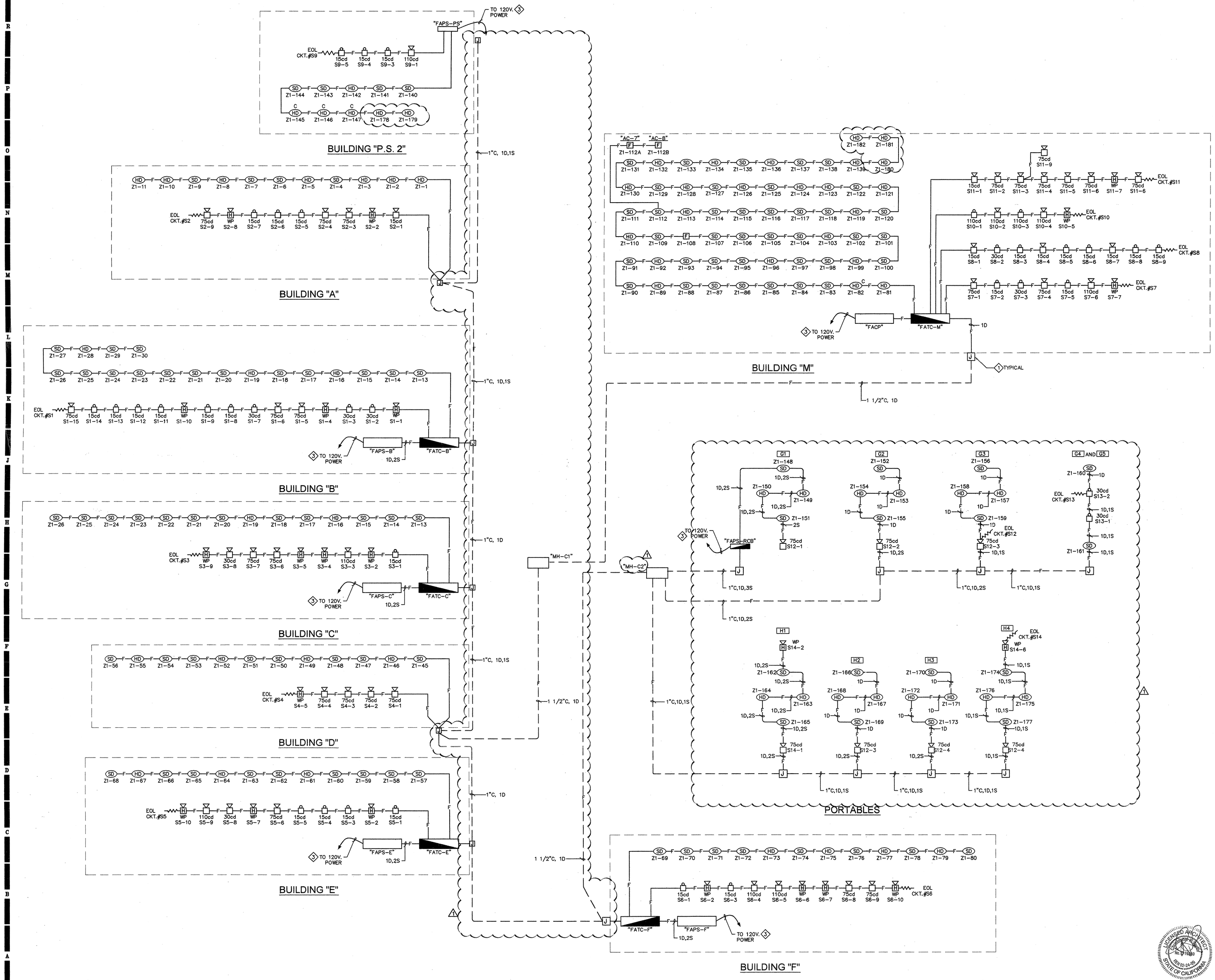

HMC GROUP
3270 INLAND EMPIRE BLVD.
ONTARIO, CALIFORNIA 91764
Telephone: 909·989·9979
Fax: 909·483·1400
Architecture • Interiors • Planning

SHEET NOTES

1. REFER TO DRAWING FLOOR PLANS FOR PULL BOX SIZES.
2. REFER TO FIRE ALARM SITE PLAN FOR MAN HOLE SIZES AND LOCATIONS.
3. PROVIDE 20A, 1P BREAKER TO MATCH EXISTING IN NEAREST PANEL. PROVIDE BREAKER WITH "LOCK ON" DEVICE.

COMPLETE AUTOMATIC FIRE ALARM SYSTEM PLAN SUBMITTAL PER DSA POLICY 95-03(FLS)

KEY PLAN

AGENCY APPROVAL

FILE NO.

IDENTIFICATION STAMP
DIV. OF THE STATE ARCHITECT
OFFICE OF REGULATION SERVICES

APPL. 04-107962

AC _____ FLS _____ SS _____

DATE _____

CONSTRUCTION DOCUMENT

SAN BERNARDINO CITY UNIFIED SCHOOL DISTRICT
777 NORTH "F" STREET
SAN BERNARDINO, CA. 92410

© HMC GROUP 2000

No	Revisions/Submissions	Date
1	ADDENDUM #1	7/31/08
3	ADD. NO. 3	2/23/10

Consultant Seal

Consultant: DOLORES & ASSOCIATES, INC.

Project Title
BRADLEY ELEMENTARY SCHOOL
MODERNIZATION
SAN BERNARDINO, CA

Drawing Title
FIRE ALARM RISER DIAGRAM

Architect's Seal

Designed: BM	Project No: 3137106
Drawn: RL	Scale: NO SCALE
Checked: JJR	Drawing No: AD1-E09
Reviewed: JJR	E-3.3
Date: 10-27-06	

P:\SBCUSD-Mods\Bradley #20-03147\Dwgs\E\20-03147E33.dwg 7-18-08-11:22 AM

DCGA # 20-03147

" BID ISSUANCE SET"